ITEM NO.	PART NUMBER	DESCRIPTION	QTY.	COMPONENT NOTES
1	50-00027	Connector, dc jack, 5.5x2.5xL17.4 mm, molding style	1	
2	30-00683	Wire, 2C TS, 18 AWG, UL2464, 300V, 80C, 5.2 mm, VW-1, PVC	1	
3	24-00183	Overmold, dc jack, 5.5 mm, Tensility	1	black

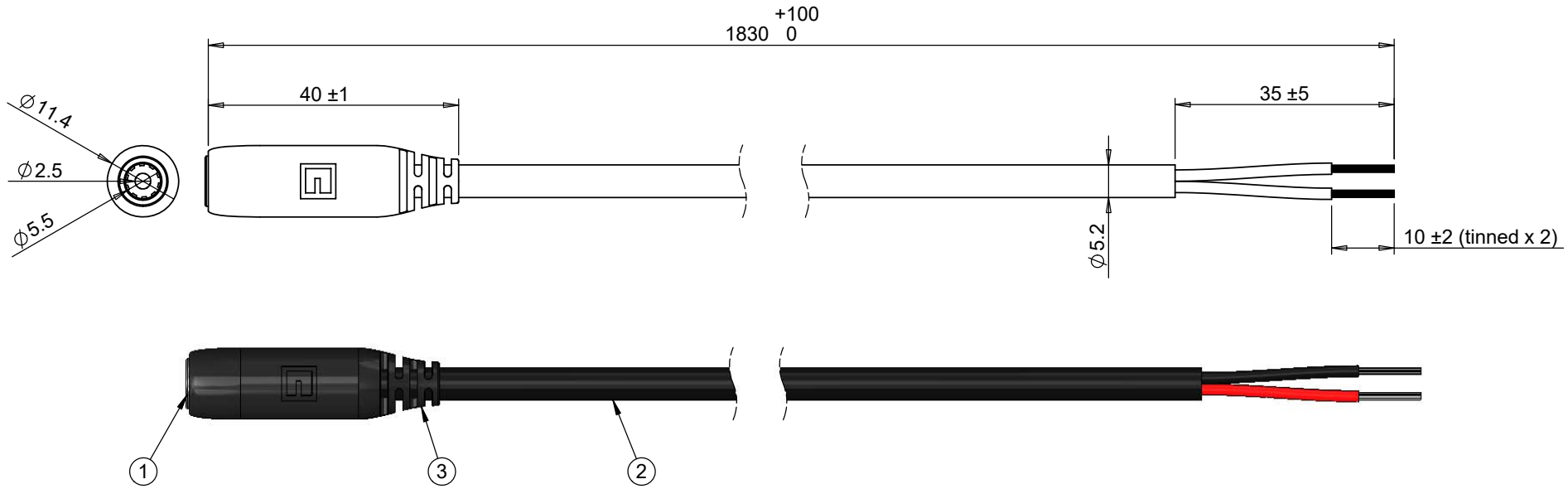

Notes:
Functionally equivalent components may be substituted

Electrical requirements: 7 A, 12 Vdc

Wiring Diagram	
50-00027	wire color
center	red
sleeve	black

Revision:	Date:	Description:
A	9/13/2016	Initial release

Prepared: DN Digitally signed by DN Date: 2017.01.30 14:10:16 -08'00'

Verified: PS Digitally signed by PS Date: 2017.01.30 15:32:03 -08'00'

Dimensions are in millimeters.
Tolerances:
X: ± 0.5 mm
X.X: ± 0.3 mm
X.XX: ± 0.05 mm

Notes:

RoHS and REACH compliant

Function test: no open, no short circuit, no intermittent

Description:

Cable, 1830 mm, 5.5x2.5 mm 50-00027 dc jack to stripped tinned, 18 AWG, 30-00683 wire

TENSILITY
tel 1.541.323.3228 800 877.670.7118
fax 1.541.323.4202 web tensility.com

Size: A
Part number: 10-02241
Scale: 1:1
Sheet 1 of 1

5 4 3 2 1