THIS DRAWING IS UNPUBLISHED. RELEASED FOR PUBLICATION - ,N/A .
© COPYRIGHT N/A By - ALL RIGHTS RESERVED.

LOC	DIST
DF	FO

REVISIONS

P	LTR	DESCRIPTION	DATE	DWN	APVD
	J	TYCO LOGO REPLACED WITH THE AMP BRAND LOGO	28APR11	CT	DH

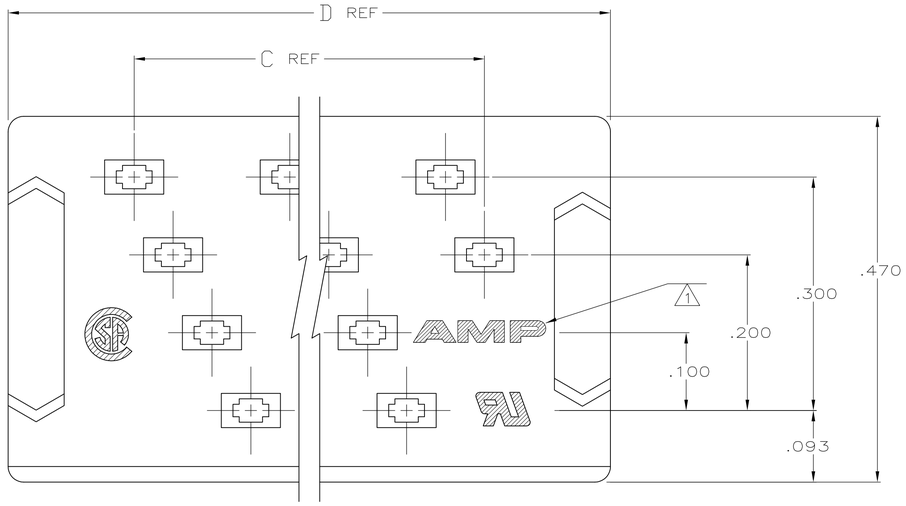

1. AMP TRADEMARK LOCATED IN APPROX AREA SHOWN.
2. STANDOFFS: POSN 10 (8) STANDOFFS AS SHOWN.
   POSN 14 (11) STANDOFFS, 3 PER DIAGONAL ROW.
   POSN 18 (14) STANDOFFS, 3 PER DIAGONAL ROW.
   POSN 22 (17) STANDOFFS, 3 PER DIAGONAL ROW.
   POSN 26 (20) STANDOFFS, 3 PER DIAGONAL ROW.
   POSN 30 (23) STANDOFFS, 3 PER DIAGONAL ROW.
   POSN 34 (26) STANDOFFS, 3 PER DIAGONAL ROW.
   POSN 38 (29) STANDOFFS, 3 PER DIAGONAL ROW.
   POSN 42 (32) STANDOFFS, 3 PER DIAGONAL ROW.
   POSN 46 (35) STANDOFFS, 3 PER DIAGONAL ROW.
   POSN 50 (38) STANDOFFS, 3 PER DIAGONAL ROW.
   POSN 54 (41) STANDOFFS, 3 PER DIAGONAL ROW.
   POSN 58 (44) STANDOFFS, 3 PER DIAGONAL ROW.
3. FINISH: BRIGHT TIN-LEAD .000100-.000200 THK OVER NICKEL .000050 MIN THK.
4. HEIGHT AFTER TERMINATION IS .238 REF.
5. FINISH: BRIGHT TIN .000100-.000200 THK OVER NICKEL .000050 MIN THK.

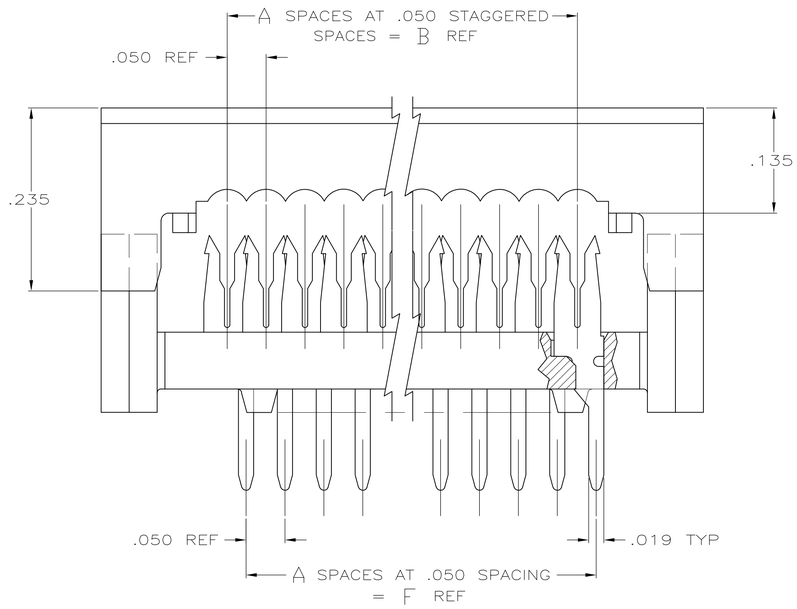

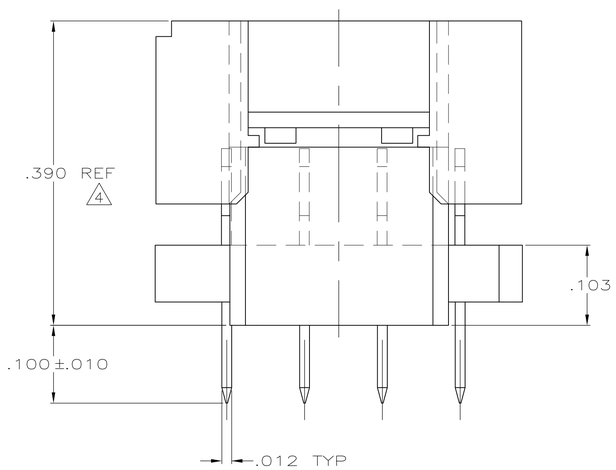

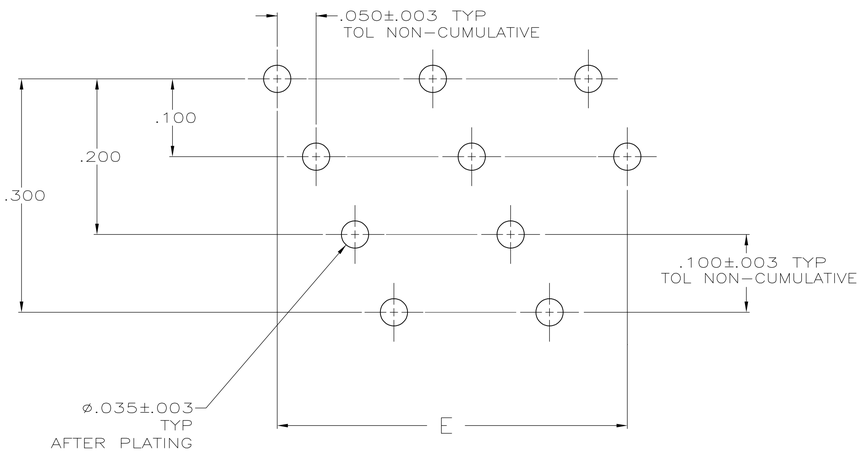

RECOMMENDED HOLE LAYOUT

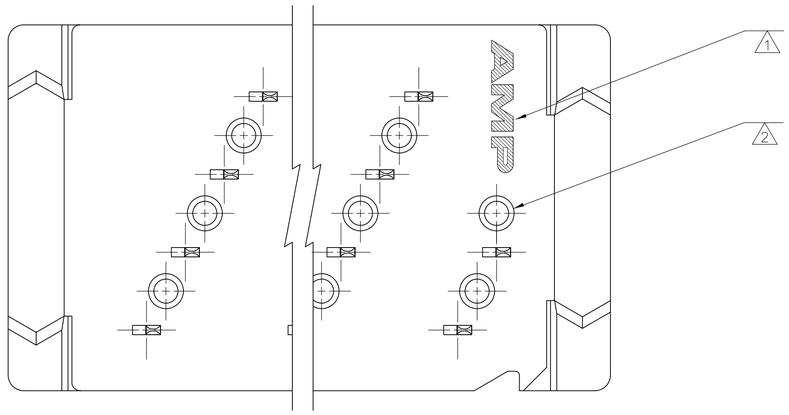

	5	2.450	2.450	2.774	2.450	2.450	49	50	6-111037-1
	5	1.650	1.650	1.974	1.650	1.650	33	34	5-111037-7
	5	1.450	1.450	1.774	1.450	1.450	29	30	5-111037-6
	5	1.250	1.250	1.574	1.250	1.250	25	26	5-111037-5
	5	.650	.650	.974	.650	.650	13	14	5-111037-2
	5	.450	.450	.774	.450	.450	9	10	5-111037-1
OBSOLETE	3	2.850	2.850	3.174	2.850	2.850	57	58	1-111037-3
OBSOLETE	3	2.650	2.650	2.974	2.650	2.650	53	54	1-111037-2
	3	2.450	2.450	2.774	2.450	2.450	49	50	1-111037-1
OBSOLETE	3	2.250	2.250	2.574	2.250	2.250	45	46	1-111037-0
OBSOLETE	3	2.050	2.050	2.374	2.050	2.050	41	42	111037-9
OBSOLETE	3	1.850	1.850	2.174	1.850	1.850	37	38	111037-8
	3	1.650	1.650	1.974	1.650	1.650	33	34	111037-7
	3	1.450	1.450	1.774	1.450	1.450	29	30	111037-6
	3	1.250	1.250	1.574	1.250	1.250	25	26	111037-5
OBSOLETE	3	1.050	1.050	1.374	1.050	1.050	21	22	111037-4
OBSOLETE	3	.850	.850	1.174	.850	.850	17	18	111037-3
	3	.650	.650	.974	.650	.650	13	14	111037-2
	3	.450	.450	.774	.450	.450	9	10	111037-1
	FINISH	F	E	D	C	B	A	NO OF POSN	PART NUMBER

THIS DRAWING IS A CONTROLLED DOCUMENT.

DIMENSIONS: INCHES

TOLERANCES UNLESS OTHERWISE SPECIFIED:
0 PLC ± -
1 PLC ± -
2 PLC ± -
3 PLC ± .005
4 PLC ± -
ANGLES ± -

MATERIAL
MOLDED PARTS: 94V-0 RATED THERMOPLASTIC, COLOR: BLACK
CONTACTS: PH BRZ PER QQ-B-750

FINISH
CONTACTS 3

DWN J. PEACHEY 05-MAR-86
CHK M.SCULLY 23-MAY-86
APVD D.HOFFMAN 23-MAY-86

PRODUCT SPEC —
APPLICATION SPEC 114-40005
WEIGHT —

TE Connectivity

NAME
KIT, AMP-LATCH PADDLEBOARD
PREASSEMBLED, .100 LONG POSTS
SHORT END, FULL TIN PLATED CONTACTS

SIZE	CAGE CODE	DRAWING NO	RESTRICTED TO
A1	00779	C-111037	—

CUSTOMER DRAWING SCALE 10:1 SHEET 1 OF 1 REV J

4805 (3/11)