DESCRIPTION

Demonstration circuit 793 is a single output, dual phase synchronous buck converter featuring the LTC3709EUH. The output voltage is 1.5V with a load rating of 30A and the input voltage range is 7V to 24V.

The combination of dual phase operation and valley current mode control allows the converter to have a fast load step recovery. A simple on-board dynamic load step circuit is provided for load step testing. Other features highlighted by demonstration circuit 793 include no R_{SENSE}™ operation, high efficiency at both heavy and light loads and rail tracking. Typical applications include desktop and notebook computers, FPGA systems, DSPs and servers.

An LT3010EMS8E-5 (5V / 50mA LDO) provides current for the LTC3709EUH's internal logic and gate drive circuitry. The 5V bias can also be supplied externally. For input voltages less than 5V, the board contains a footprint for an LT1613 boost converter with a 5V output.

NOTE: If an external bias voltage is applied it needs to be between 4.2V and 7.0V.

Design files for this circuit board are available. Call the LTC factory.

PowerPath is a trademark of Linear Technology Corporation

Table 1. Performance Summary (T_A = 25°C)

PARAMETER	CONDITION	VALUE
Minimum Input Voltage		7V
Maximum Input Voltage		24V
Output Voltage V_{OUT}	V_{IN} = 7V to 24V, I_{OUT} = 0A to 30A	1.5V ±2%
Maximum Output Current		30A
Typical Output Voltage Ripple	V_{IN} = 12V, I_{OUT} = 30A (20MHz BW)	25mV_{P-P}
Typical Switching Frequency		310kHz
Typical Efficiency (+5V bias supplied externally)	V_{IN} = 24V, I_{OUT} = 30A	86.6%
	V_{IN} = 12V, I_{OUT} = 30A	89.5%
	V_{IN} = 7V, I_{OUT} = 30A	89.9%
Airflow	T_{AMB} ≤ 50°C	No airflow

QUICK START PROCEDURE

Demonstration circuit 793 is easy to set up to evaluate the performance of the LTC3709EUH. Refer to Figure 1 for proper measurement equipment setup and follow the procedure below:

1. Place jumpers in the following positions:
   MODE SELECT CCM
   TRACK INT
   +5VSEL LDO
2. With power off, connect the input power supply to Vin and GND.
3. Turn on the power at the input and set the input voltage to 12V.
4. Check for the proper output voltage. V_{OUT} should range from 1.47V to 1.53V.
5. Apply 30A load and re-check the regulation.

6. Once the proper output voltages are established, adjust the load and input voltage within their respective operating range and test the output voltage regulation, output voltage ripple, efficiency, rail tracking, load step response and other parameters or features.

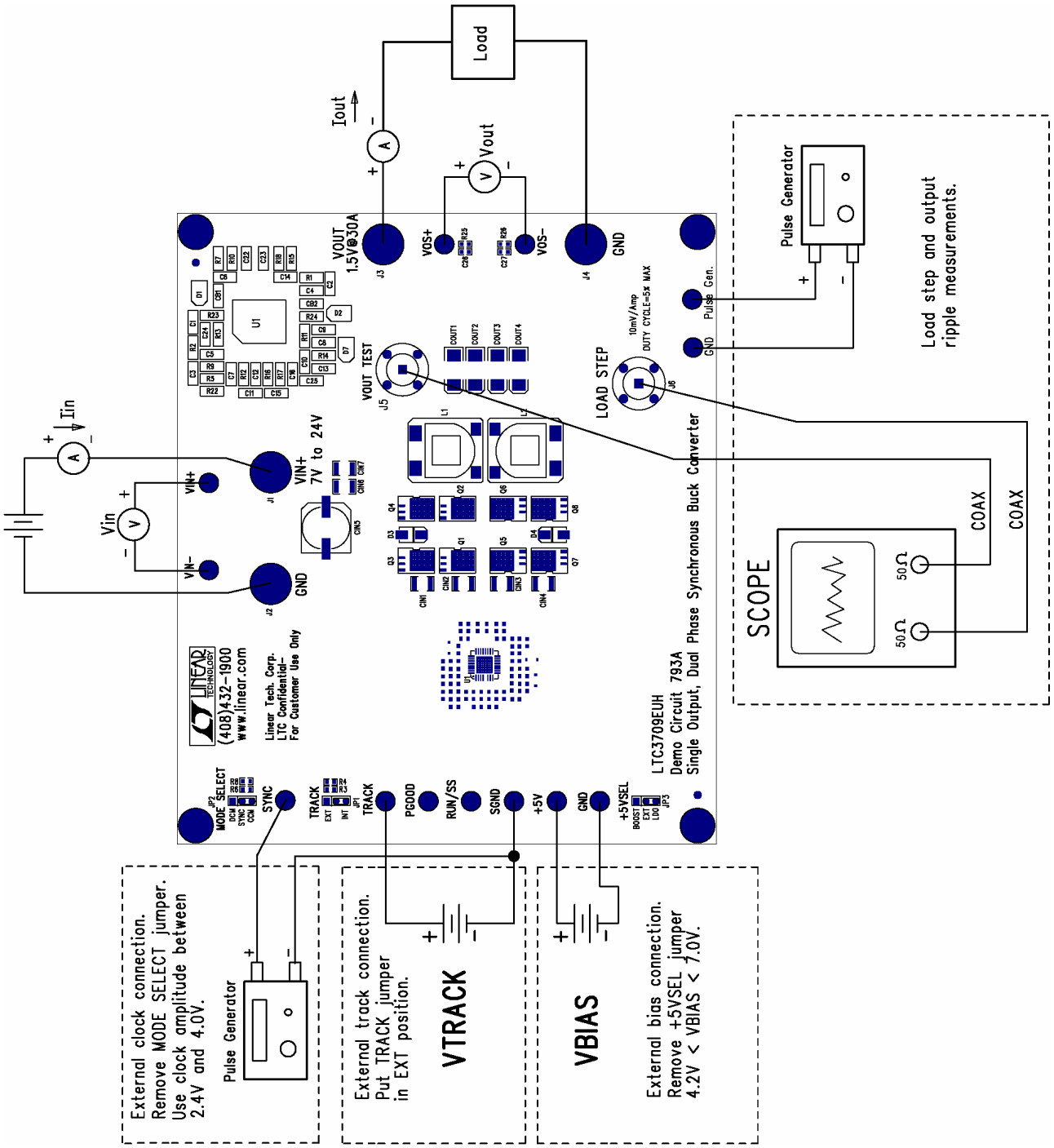

Figure 1. Proper Measurement Equipment Setup

LOAD STEP TESTING

The load step response can be tested with the onboard dynamic load circuit and a pulse generator. Refer to Figure 3 and follow the steps below to measure the load step response.

1. Set the output of the pulse generator for a duty cycle of less than 5% and an amplitude of 1V or below.
2. Connect the output of pulse generator from Pulse Gen. to GND.
3. Connect the LOAD STEP BNC connector to an oscilloscope with a coaxial cable to monitor the load step current waveform. 10mV = 1A.
4. Connect the VOUT TEST BNC connector to an oscilloscope with a coaxial cable to monitor the output voltage waveform.
5. Apply input voltage to demonstration circuit 793 and the desired amount of static load to the output.
6. Increase the amplitude of the pulse generator output to obtain the desired load step height.

RAIL TRACKING

To implement external coincident rail tracking, connect the track source between the TRACK and SGND turrets (see Figure 1). If V_{OUT} does not need to track an external signal during startup, then place the jumper in the INT position. With the jumper in the INT position, V_{OUT} will track the RUN/SS voltage minus the on threshold during startup.

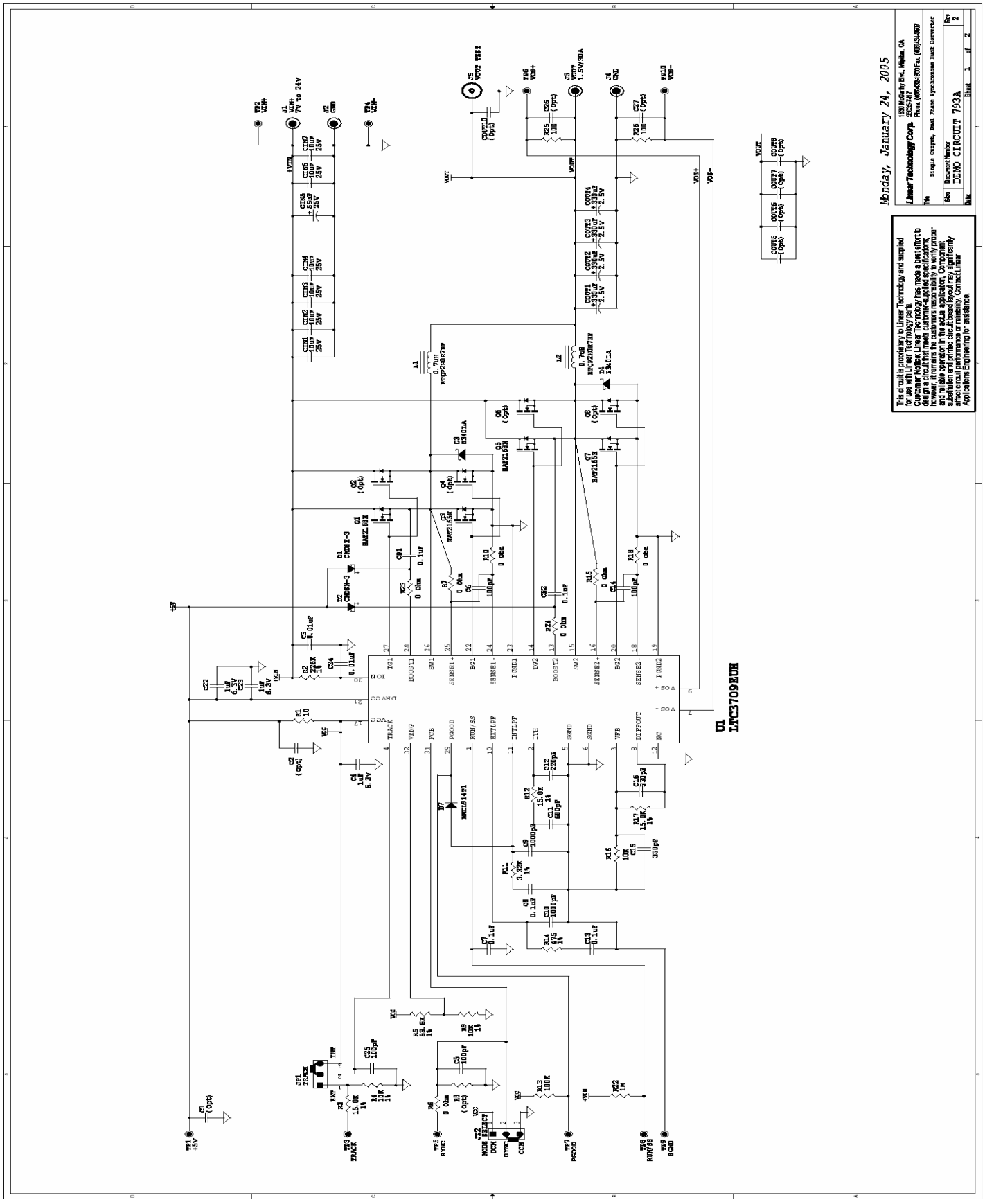
Monday, January 24, 2005
Linear Technology Corp.
DEMO CIRCUIT 793A
U1
LTC3709EUH

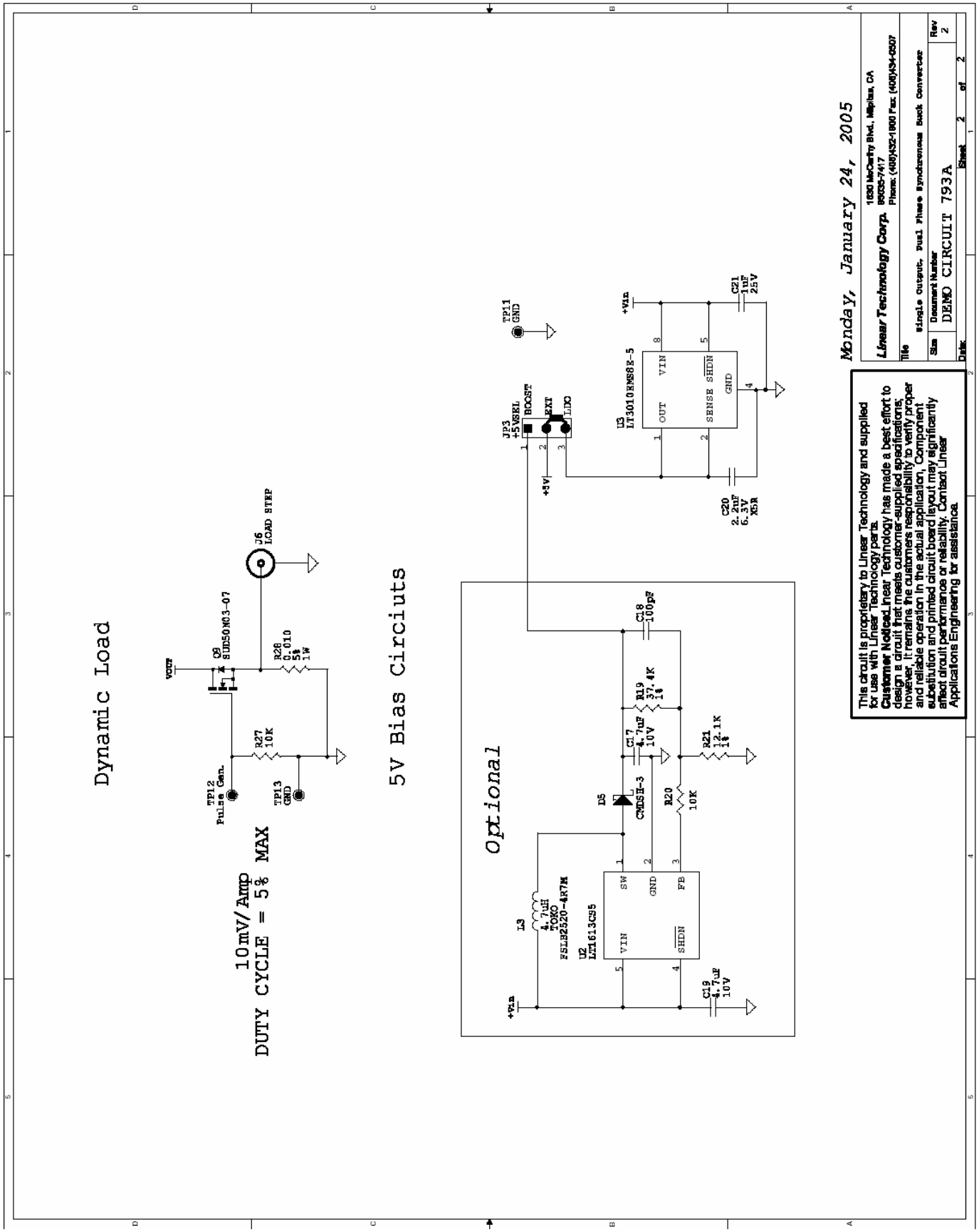
Dynamic Load
10mV/Amp
DUTY CYCLE = 5% MAX
5V Bias Circiuts
Optional
Monday, January 24, 2005
Linear Technology Corp.
1630 McCarthy Blvd., Milpitas, CA
95035-7417
Phone: (408)432-1900 Fax: (408)434-0507
Single Output, Dual Phase Synchronous Buck Converter
DEMO CIRCUIT 793A
This circuit is proprietary to Linear Technology and supplied for use with Linear Technology parts.
Customer Notice: Linear Technology has made a best effort to design a circuit that meets customer-supplied specifications; however, it remains the customer's responsibility to verify proper and reliable operation in the actual application. Component substitution and printed circuit board layout may significantly affect circuit performance or reliability. Contact Linear Applications Engineering for assistance.