NOTES:
1. MATERIALS AND FINISHES:
   FRONT BODY - BRASS, NICKEL PLATING (.000100 MIN THICK)
   REAR CUBE BODY - BRASS, MATTE TIN PLATING (.000100 MIN THICK)
   FEMALE CONTACT - BERYLLIUM COPPER, GOLD PLATING (.000030 MIN THICK)
   INSULATOR - PTFE
2. ELECTRICAL:
   A. IMPEDANCE: 75 OHM
   B. FREQUENCY RANGE: DC - 1 GHz
   C. VSWR(RETURN LOSS): 1.12 (25dB), MAX DC - 1.5GHz
      1.22 (20dB), MAX 1.5 - 3 GHz
   VSWR PERFORMANCE DEPENDANT UPON PCB LAUNCH CONFIGURATION
4. PACKAGING:
   A. QUANTITY: TRAY PACK
   B. MARKING: TRAY TO BE MARKED
   "AMPHENOL, 31-70352, AND DATE CODE"

THIRD ANGLE PROJ.

REVISIONS

REV	DESCRIPTION	DATE	ECO	APPR
A	RELEASE TO MFG.	11/9/07	46835	SH
B	ADD STAKING TWO PLACES/RD-DM1205401J7	30-May-12	49112	SH

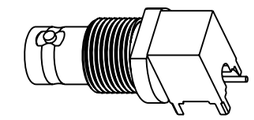

SCALE 1.000

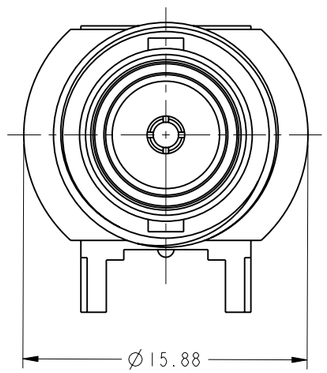

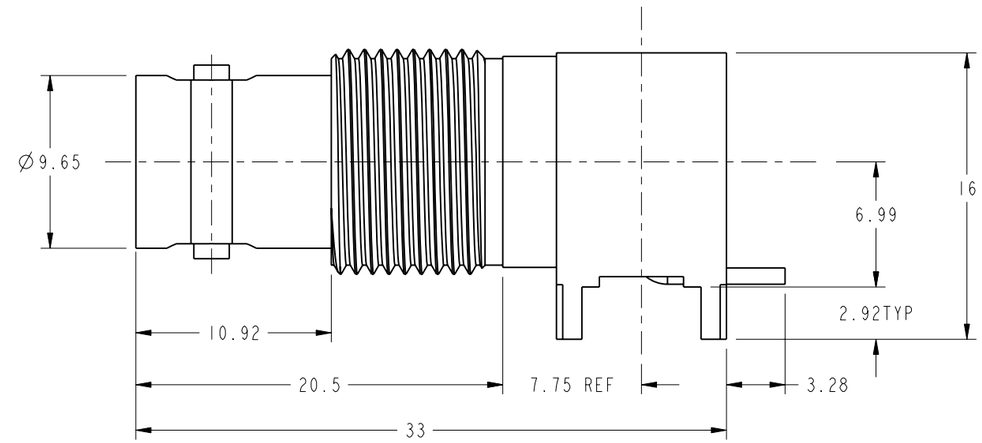

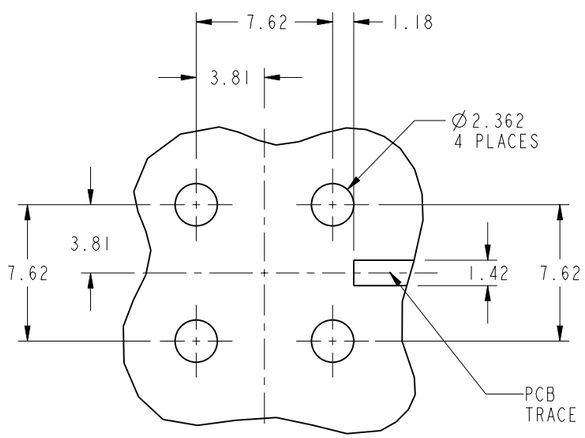

RECOMMENDED
PCB FOOTPRINT
SCALE 3.000

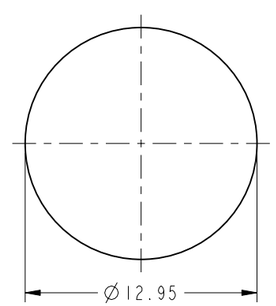

RECOMMENDED
PANEL HOLE
SCALE 3.000

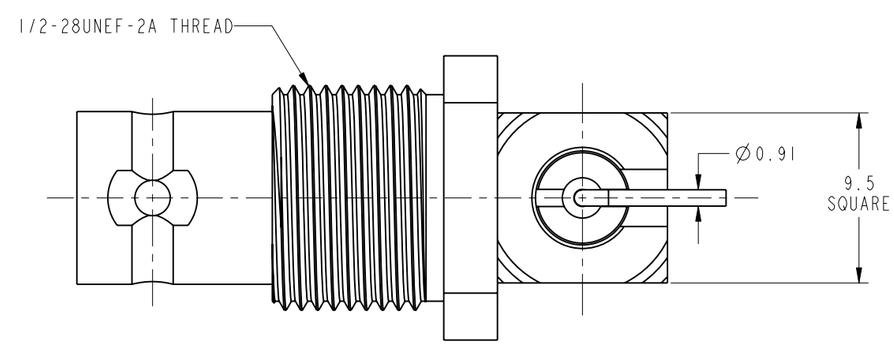

CUSTOMER OUTLINE DRAWING

ALL OTHER SHEETS ARE FOR INTERNAL USE ONLY

UNLESS OTHERWISE SPECIFIED, DIMENSIONS ARE IN METRIC AND TOLERANCES ARE:

<0.5mm	0.5 - 6mm	6 - 30mm	30 - 120mm	ANGLES
± 0.05mm	±0.1mm	±0.2mm	± 0.3mm	±1°

NOTICE - These drawings, specifications, or other data (1) are, and remain the property of Amphenol corp. (2) must be returned upon requiest; and (3) arre confidential and not to be disclosed to any person other than those to whom they are given by Amphenol Corp. the funishing of these drawings, specifications, or other data by Amphenol Corp., or to any other person to anyone for any purpose is not to be regarded by implicatioin or otherwise in any manner licensing, granting rights to permitting such holder or any other sperson to manufacture, use or sell any product, process or design, patented or otherwsie, that may in any way be related to or disclosed by said drawings, specifications, or other data.

MATERIAL
-

REFERENCE
*** AND ***
TEKTRONIX PN: 131-8271-00

FINISH

DRAWN J.SHAO	DATE 29-May-12	
ENGINEER M. HOYACK	DATE 31-Oct-07	
APPROVED S.HSIEH	DATE 29-May-12	
CAD FILE 1:BNC/31-70352		

TITLE
BNC R/A PCB JACK
THRU LEG, SMT CONTACT
BULKHEAD

SCALE: 3.0:1.0 | SHEET 2 OF 2

DWG SIZE B | REV B

Amphenol RF
Danbury CT USA, Tainan, Taiwan, Shenzhen, China
www.amphenolrf.com

DRAWING NO. 31-70352
ITEM NO. 31-70352
PART NO. 31-70352