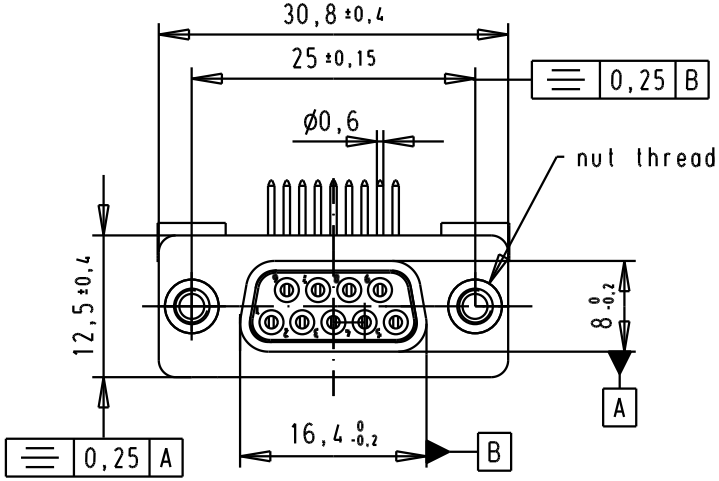

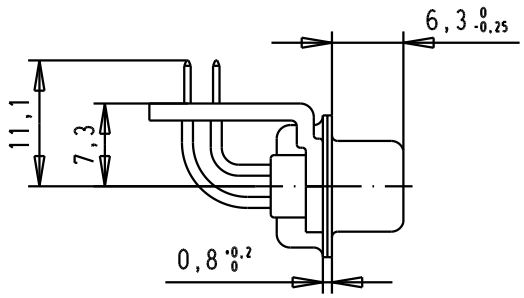

SPECIFICATION

Mating Cycles	500
Filter type	C
Capacitance	1000pf ±20%
Working Voltage	100v
Current Rating	7.5A
Insulation Resistance	>1GΩ

Minimum insertion loss

FREQUENCY (MHz)	ATTENUATION (dB)
5	1dB
10	3dB
50	12dB
100	20dB
500	34dB
1000	30dB

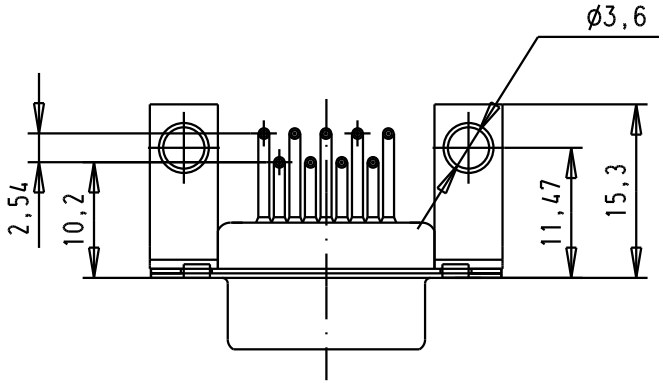

PCB Layout, Component side

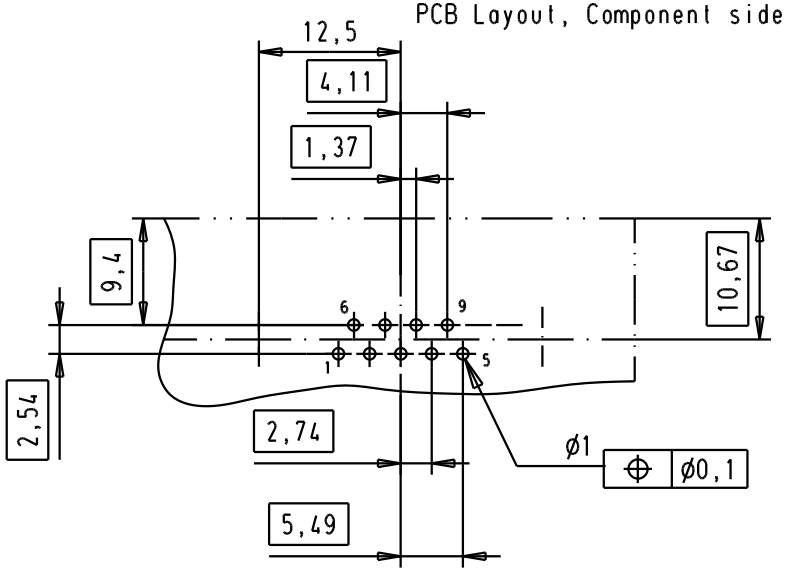

							Dat.	Name	All Dim. in mm Orig. Size DIN A 4	D-Sub, female, angled, 9 Poles, with turned solder pin, metal bracket with clinch nut	Ma?Mstab/ Scale
						Detail.	8-JUL-02	CV			1.5:1
						Insp.					
						Stand.					
09641147237	M3		31864	23/01/04	AF	HARTING EURL F-95972 Paris				TB 0964114723x	Blatt/ Page 3/4
09641147236	UNC 4-40		31058	8-JUL-02	CV						
Part number	Nut thread		Mod.	Dat.	Name					Sub.	