used for: DIN EN 60603

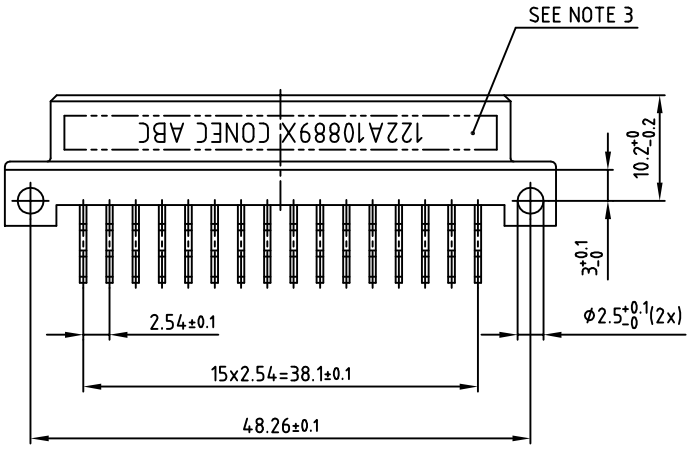

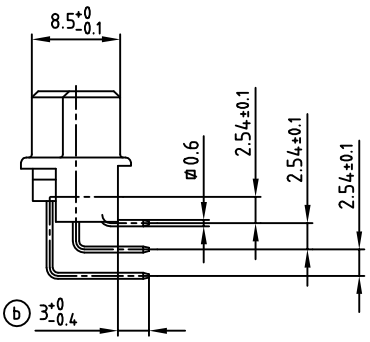

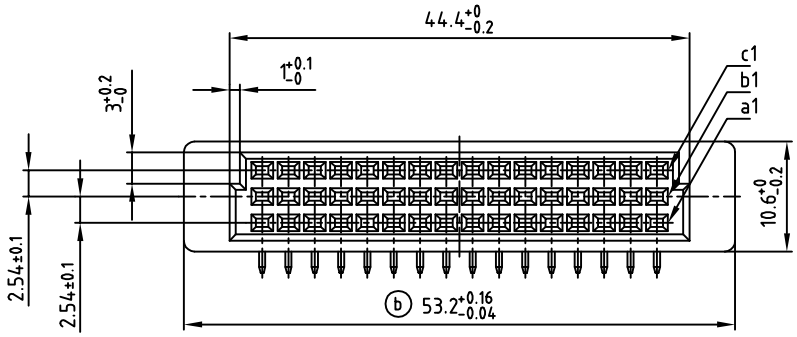

PCB-Hole pattern

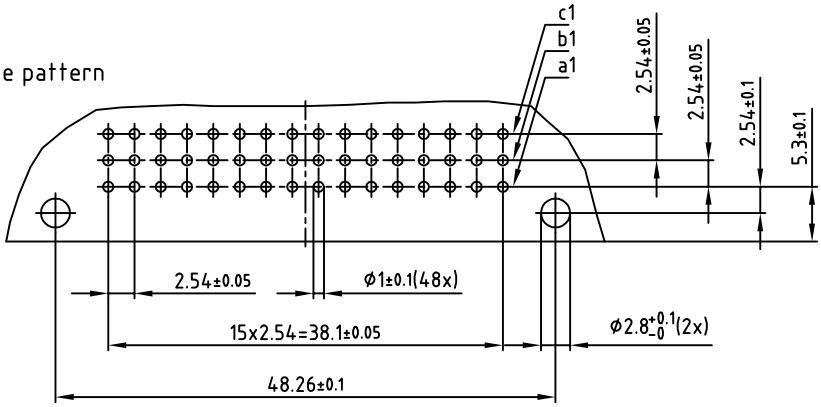

NOTES:

1. INSULATORS: PBT GF UL 94 V-0, GREY
2. CONTACTS: COPPER ALLOY
   PLATING: GOLD OVER NICKEL
   50 MATING CYCLES
3. CONNECTOR IS PART MARKED: 122A10889X CONEC ABC

Directive 2002/95/EC „RoHS" Compliant

THIS DRAWING MAY NOT BE COPIED OR REPRODUCED IN ANY WAY, AND MAY NOT BE PASSED ON TO A THIRD PARTY WITHOUT WRITTEN PERMISSION. OWNERSHIP AND COPYRIGHT OF CONEC GmbH
DO NOT ALTER CAD DRAWING BY HAND

rev.	description	date	name
2 x b	Ä 3749	20.09.2010	Petker
a	Origin		

tolerance

	date	name
2009		
drawn	13.07.	Petker
appd.	13.07.	Mickenbecker
norm	DIN EN 60603	
d-old		

CONEC®

scale: 2:1
material: SEE NOTES

title: Female connector
Mini Type "R" 48pos.
Contact spacing .100"

dwg no: 12K2A205
AutoCAD 2006
DIN-A 3
sh: 1/1

part no: 122A10889X