DRAWING MADE IN THIRD ANGLE PROJECTION

| PART NUMBER | REV | FIRST USED |
|---|---|---|
| 1385314-1 | A | 122500-1 |
| 1385314-2 | A | 565435-5 |
| 1385314-3 | A | 354500-1 |

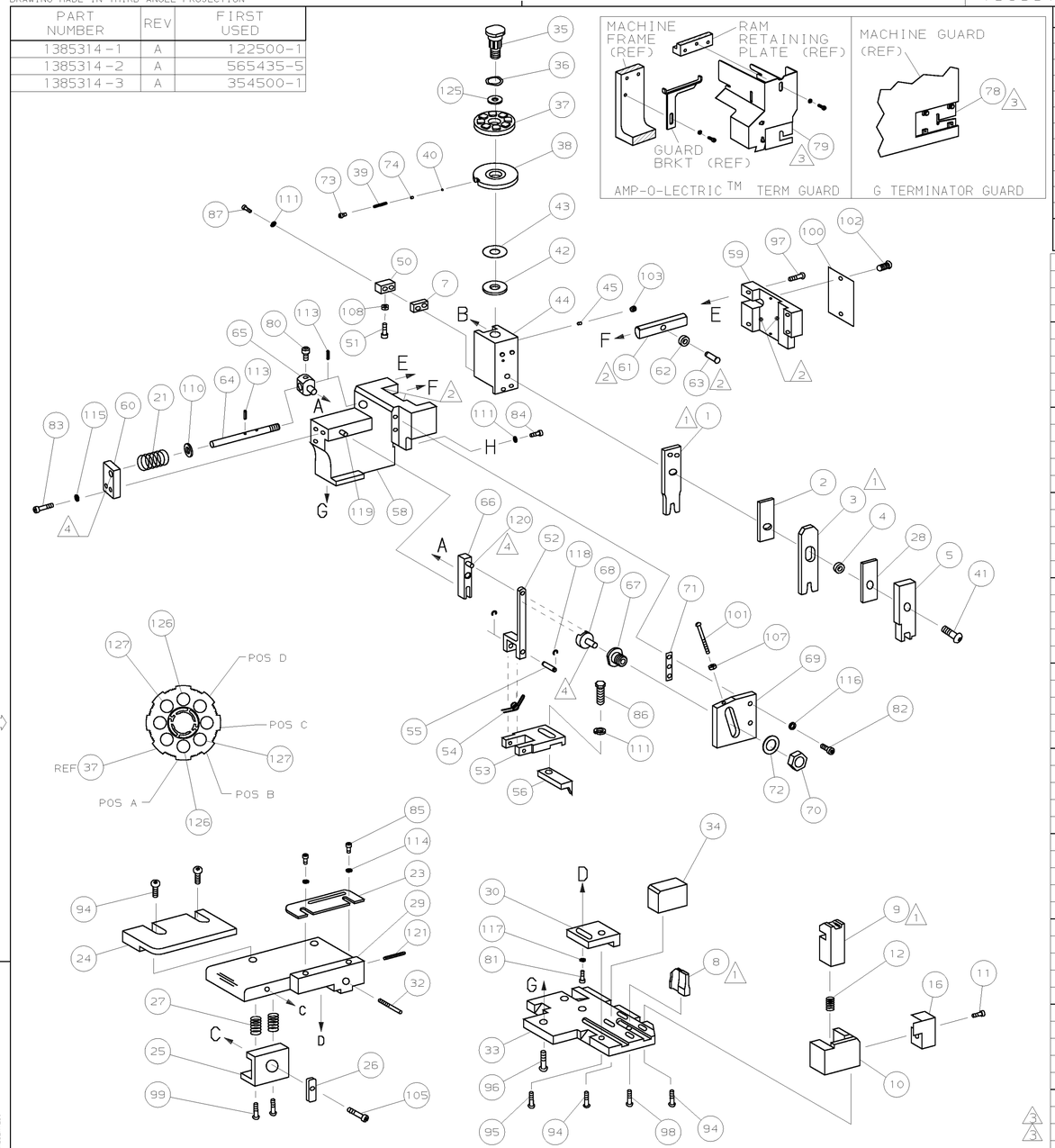


TERMINAL NAME: TAB

| AMP PN | MFR PN |
|---|---|
| 286994 | 8232-4252 |

SUMITOMA TERMINAL AMP CRIMP SPECS

| PAD LTR | CRIMP HEIGHT | WIRE SIZE |
|---|---|---|
| A | .120 ±.002 [3.05 ±0.05mm] | 10 |
| B | .107 ±.002 [2.72 ±0.05mm] | 12 |
| C | NOT | USED |
| D | NOT | USED |

| CRIMP | SIZE | TYPE | RANGE |
|---|---|---|---|
| WIRE | .200 [5.08mm] | F | 12-10 |
| INSUL | .250 [6.35mm] | F | .187 MAX |

| WIRE STRIP LENGTH | TERM APPL SPEC | FEED | APPL INSTRUCTION | SET UP GAGE | LAYOUT |
|---|---|---|---|---|---|
| .223-.240 | NONE | .750 | 408-8040 | 458637-1 | L2573 |

| -3 | -2 | -1 | U/M | DWG SIZE | PART NO | DESCRIPTION | ITEM NO |
|---|---|---|---|---|---|---|---|
| | | | | | | | 129 |
| | | | | | | | 128 |
| 2 | 2 | 2 | - | C | 6-354779-9 | PIN, WIRE DISC (.2840)B | 127 |
| 2 | 2 | 2 | - | C | 4-354778-1 | PIN, WIRE DISC (.2700)A | 126 |
| 1 | 1 | 1 | - | A | 986950-1 | WASHER, FLAT PRECISION | 125 |
| 1 | 1 | 1 | - | A | 217238-1 | GENERAL INSTRUCTION PACKAGE | 124 |
| 1 | 1 | 1 | - | - | 4088040 | SF APPL INST 408-8040 | 123 |
| | | | | | | | 122 |
| 1 | 1 | 1 | - | A | 4-21028-0 | PIN,SLT SPR(ø.093x.75)ST GDE PL | 121 |
| REF | REF | REF | - | A | 1-21030-1 | PIN,DOWEL(ø.187x.50)LEVER | 120 |
| REF | REF | REF | - | A | 1-21030-6 | PIN,DOWEL(ø.187x1.25)HOUSING | 119 |
| REF | REF | REF | - | A | 21045-3 | RING,RET "C"(ø.187)FD FING PIN | 118 |
| 1 | 1 | 1 | - | A | 21024-5 | WASHER, LOCK(#10)ADJ BLOCK | 117 |
| REF | REF | REF | - | A | 21024-5 | WASHER,LOCK(#10)ADJ PLATE | 116 |
| REF | REF | REF | - | A | 21024-5 | WASHER,LOCK(#10)FEED GDE ROD | 115 |
| 2 | 2 | 2 | - | A | 21024-2 | WASHER,LOCK(#4)FRONT STP GUIDE | 114 |
| REF | REF | REF | - | A | 5-21028-1 | PIN,SLT SPR(ø.125x.50)ADJ ROD | 113 |
| | | | | | | | 112 |
| 4 | 4 | 4 | - | A | 21024-4 | WASHER,LOCK(#8)STRIPPER | 111 |
| REF | REF | REF | - | A | 21899-4 | WASHER,FLAT(ø5/16)SCREW ADJ | 110 |
| | | | | | | | 109 |
| 1 | 1 | 1 | - | A | 21018-5 | NUT,HEX(NO.6)HOLDDOWN | 108 |
| REF | REF | REF | - | A | 21068-5 | NUT,HEX(6-32)FEED ADJ | 107 |
| | | | | | | | 106 |
| 1 | 1 | 1 | - | A | 22353-8 | SCR,SHLD(ø.187x.25)DRAG LEVER | 105 |
| 1 | 1 | - | - | A | 992031-1 | PIN, CLEVIS | 104 |
| 1 | 1 | 1 | - | A | 21009-2 | SCR,SKT SET(1/4-20x.25 LW)RAM | 103 |
| 2 | 2 | 2 | - | A | 21017-2 | SCR,DRIVE(#2x.19)ID PLATE | 102 |
| REF | REF | REF | - | A | 6-23715-5 | SCR,PAN HD(6-32x1.50)FEED ADJ | 101 |
| 1 | 1 | 1 | - | B | 461264-1 | PLATE, IDENTIFICATION | 100 |
| 2 | 2 | 2 | - | A | 3-21002-0 | SCR,BHC(10-32x.88)DRAG | 99 |
| 1 | 1 | 1 | - | A | 22733-8 | SCR,BHC(8-32x.38 LW)ANVIL | 98 |
| REF | REF | REF | - | A | 2-21002-9 | SCR,BHC(10-32x.75)CAP | 97 |
| REF | REF | REF | - | A | 2-22733-8 | SCR,BHC(1/4-20x.62)HOUSING | 96 |
| REF | REF | REF | - | A | 2-21002-7 | SCR,BHC(10-32x.50)SG ADJ BLOCK | 95 |
| 6 | 6 | 6 | - | A | 2-21002-2 | SCR,BHC(8-32x.50)TERM H DWN | 94 |
| | | | | | | | 93 |
| | | | | | | | 92 |
| 1 | 1 | 1 | - | A | 1-21002-7 | SCR,BHC(6-32x.38)CAM | 91 |
| | | | | | | | 90 |
| 1 | 1 | - | - | A | 7-21000-9 | SCR,SHC(4-40x.19)STRIPPER | 89 |
| | | | | | | | 88 |
| 2 | 2 | 2 | - | A | 2-21000-9 | SCR,SHC(8-32x.62)DEP-HOLD | 87 |
| 1 | 1 | 1 | - | A | 2-22603-0 | SCR,HEX HD(8-32x.31)FEED FINGER | 86 |
| 2 | 2 | 2 | - | A | 1-21000-3 | SCR,SHC(4-40x.25)F ST GUIDE | 85 |
| 1 | 1 | 1 | - | A | 2-21000-7 | SCR,SHC(8-32x.50)STRIPPER | 84 |
| REF | REF | REF | - | A | 3-21000-7 | SCR,SHC(10-32x.75)FEED ROD GD | 83 |
| REF | REF | REF | - | A | 3-21000-6 | SCR,SHC(10-32x.62)FD ADJ BLK | 82 |
| 1 | 1 | 1 | - | A | 3-21000-4 | SCR,SHC(10-32x.38)SG ADJ BL | 81 |
| REF | REF | REF | - | A | 3-21000-4 | SCR,SHC(10-32x.38)PIVOT BLK | 80 |
| - | REF | - | - | B | 455749-1 | GUARD, WINDOW | 79 |
| REF | - | - | - | B | 679532-1 | INSERT, GUARD | 78 |
| | | | | | | | 77 |
| | | | | | | | 76 |
| | | | | | | | 75 |
| 1 | 1 | 1 | - | A | 690603-1 | SPRING, ASSIST | 74 |
| 1 | 1 | 1 | - | A | 23030-1 | SCR,SHC(6-32x.25 SL)INS DISC | 73 |
| REF | REF | REF | - | A | 458109-1 | WASHER, SPECIAL | 72 |
| REF | REF | REF | - | A | 690517-1 | SPACER | 71 |

QTY REQD PER ASSY — PARTS LIST

| -1 | -2 | -3 | U/M | DWG SIZE | PART NO | DESCRIPTION | ITEM NO |
|---|---|---|---|---|---|---|---|
| LEADMAKER | BENCH MODEL K | BENCH MODEL G | | | | MECH POST FEED / MECH PRE FEED / MECH PRE FEED | |
| REF | REF | REF | - | B | 22594-8 | NUT,HEX(1/2-20) | 70 |
| REF | REF | REF | - | B | 240628-1 | PLATE, ADJUSTMENT | 69 |
| REF | REF | REF | - | B | 240626-1 | SHAFT, PIVOT | 68 |
| REF | REF | REF | - | B | 240633-1 | BUSHING | 67 |
| REF | REF | REF | - | A | 455680-1 | LEVER, INTERMEDIATE | 66 |
| REF | REF | REF | - | B | 240629-1 | BLOCK, PIVOT | 65 |
| REF | REF | REF | - | A | 240632-2 | SCREW, ADJ FEED ROD | 64 |
| REF | REF | REF | - | B | 240659-3 | PIN, CAM ROLLER | 63 |
| REF | REF | REF | - | B | 240658-1 | ROLLER, CAM | 62 |
| REF | REF | REF | - | B | 454398-2 | ROD, FEED | 61 |
| REF | REF | REF | - | A | 454178-1 | GUIDE, FEED ROD | 60 |
| REF | REF | REF | - | C | 454220-1 | CAP, RAM | 59 |
| REF | REF | REF | - | D | 454485-1 | HOUSING | 58 |
| | | | | | | | 57 |
| 1 | 1 | 1 | - | B | 458537-2 | PAWL, FEED | 56 |
| REF | REF | REF | - | B | 240624-1 | PIN, FEED FINGER | 55 |
| REF | REF | REF | - | B | 691499-1 | SPRING, FEED FINGER | 54 |
| REF | REF | REF | - | B | 690541-1 | HOLDER, FEED FINGER | 53 |
| REF | REF | REF | - | A | 455679-2 | LEVER, TERMINAL FEED ARM | 52 |
| 1 | 1 | 1 | - | A | 811242-2 | BUMPER, HOLDDOWN | 51 |
| 1 | 1 | 1 | - | A | 690753-1 | SPACER, TONKER | 50 |
| 1 | - | - | - | B | 690602-6 | CAM, PRE-FEED 1 5/8 ST | 49 |
| - | 1 | - | - | B | 690602-5 | CAM, PRE-FEED 1 1/8 ST | 48 |
| - | - | 1 | - | B | 690501-4 | CAM, POST-FEED 1 5/8 ST | 47 |
| 1 | 1 | 1 | - | B | 459456-2 | APPLICATOR, BASIC (SUBASSY) | 46 |
| 1 | 1 | 1 | - | A | 690191-1 | PLUG, NYLON | 45 |
| 1 | 1 | 1 | - | C | 455673-1 | RAM | 44 |
| 1 | 1 | 1 | - | A | 690125-1 | WASHER, LAMINATED | 43 |
| 1 | 1 | 1 | - | A | 1-690124-0 | WASHER, RAM | 42 |
| 1 | 1 | 1 | - | A | 7-21002-9 | BOLT, CRIMPER(5/16x1.00) | 41 |
| 1 | 1 | 1 | - | A | 23241-6 | BALL, STEEL | 40 |
| 1 | 1 | 1 | - | A | 690170-1 | SPRING, COMPRESSION | 39 |
| 1 | 1 | 1 | - | C | 690142-1 | DISC, INSULATION | 38 |
| 1 | 1 | 1 | - | D | 354777-1 | WIRE DISC, PLASTIC | 37 |
| 1 | 1 | 1 | - | A | 22480-5 | WASHER, SPRING | 36 |
| 1 | 1 | 1 | - | B | 690212-1 | POST, RAM | 35 |
| 1 | 1 | 1 | - | B | 690786-1 | SUPPORT, TERMINAL | 34 |
| REF | REF | REF | - | D | 455675-1 | PLATE, BASE | 33 |
| 1 | 1 | 1 | - | A | 690432-3 | SCREW, ADJUSTMENT | 32 |
| | | | | | | | 31 |
| REF | REF | REF | - | B | 455689-1 | BLOCK, STRIP GUIDE ADJ | 30 |
| 1 | 1 | 1 | - | C | 458144-1 | PLATE, STRIP GUIDE | 29 |
| 1 | 1 | 1 | - | C | 1-455888-0 | SPACER, FRONT SHEAR DEP | 28 |
| 2 | 2 | 2 | - | A | 1-22284-0 | SPRING, DRAG | 27 |
| 1 | 1 | 1 | - | B | 240793-1 | LEVER, DRAG RELEASE | 26 |
| 1 | 1 | 1 | - | B | 240792-1 | DRAG, TERMINAL | 25 |
| 1 | 1 | 1 | - | D | 6-690504-2 | GUIDE, STRIP (REAR) | 24 |
| 1 | 1 | 1 | - | A | 690438-1 | GUIDE, STRIP (FRONT) | 23 |
| - | - | 1 | - | B | 690472-2 | STRIPPER | 22 |
| REF | REF | REF | - | A | 4-22284-9 | SPRING, FEED RETURN | 21 |
| 1 | 1 | - | - | A | 679218-1 | STRIPPER WIRE STOP ASSY | 20 |
| 1 | 1 | - | - | B | 458949-1 | STRIPPER | 19 |
| | | | | | | | 18 |
| | | | | | | | 17 |
| 1 | 1 | 1 | - | B | 318563-1 | GUARD, CHIP, FRONT | 16 |
| | | | | | | | 15 |
| | | | | | | | 14 |
| | | | | | | | 13 |
| 1 | 1 | 1 | - | A | 5-22280-0 | SPRING, SHEAR | 12 |
| 1 | 1 | 1 | - | B | 690461-2 | STOP, SHEAR | 11 |
| 1 | 1 | 1 | - | C | 1-690459-0 | HOLDER, SHEAR (FRONT) | 10 |
| 1 | 1 | 1 | - | C | 454276-9 | SHEAR, FLOAT (FRONT) | 9 |
| 1 | 1 | 1 | - | C | 1-318711-9 | ANVIL | 8 |
| 1 | 1 | 1 | - | C | 2-240641-9 | SPACER, DEPRESSOR (REAR) | 7 |
| | | | | | | | 6 |
| 1 | 1 | 1 | - | C | 1-455889-8 | DEPRESSOR, SHEAR (FRONT) | 5 |
| 1 | 1 | 1 | - | B | 238011-2 | SPACER, BLOCK CRIMPER | 4 |
| 1 | 1 | 1 | - | C | 4-456134-7 | CRIMPER, INSULATION | 3 |
| 1 | 1 | 1 | - | C | 1-455888-2 | SPACER, CRIMPER | 2 |
| 1 | 1 | 1 | - | C | 7-458141-9 | CRIMPER, WIRE | 1 |

REVISION OF EACH ASSY NO (WHEN BLANK, USE DWG REVISION)

QTY REQD PER ASSY — PARTS LIST

1. RECOMMENDED SPARE PARTS.
2. GREASE LIGHTLY.
3. GUARD MUST BE IN PLACE WHEN OPERATING APPLICATOR IN A BENCH MACHINE.
4. LUBRICATE DAILY USING NO. 20 MACHINE OIL.
5. ITEMS WITH QTY OF REF SPECIFIED (EXCEPT ITEMS 78 AND 79) ARE USED ON ITEM 46.

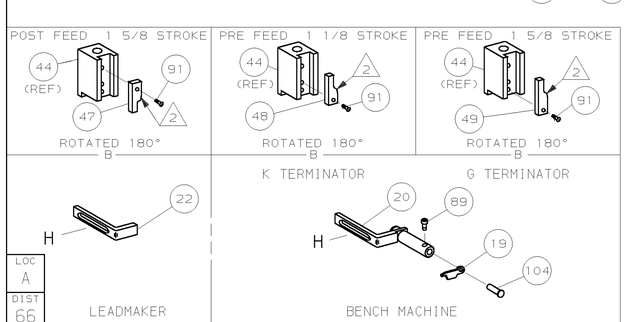


| P | F | LTR | REVISION RECORD | APP | DATE |
|---|---|---|---|---|---|
| | | A | REVISED | BH | 9/01 |

DIMENSIONS IN INCHES. DO NOT SCALE PRINT. TOLERANCES UNLESS OTHERWISE SPECIFIED: 2 PLC DEC ±- 3 PLC DEC ±- 4 PLC DEC ±- ANGLES ±- SURF TEXTURE: √ REMOVE BURRS, BREAK SHARP EDGES R.015 MAX

MATL - HT TR - FIN -

DR B.HIGMAN 20AUG01 APP T.ELBIN 20AUG01 CHK - REL -

AMP Incorporated Harrisburg, PA 17105-3608

NAME SIDE FEED HDM APPLICATOR MACHINE REF MINI APPL

SCALE - SIZE D DWG NO 1385314 SHEET 1 OF 1 REV A

CAGE CODE 00779 CUSTOMER AND ASSEMBLY DRAWING RESTRICTED TO -

THIS DRAWING IS A CONTROLLED DOCUMENT. THIS DRAWING IS UNPUBLISHED. © COPYRIGHT 2001 RELEASED FOR PUBLICATION: 2001 BY AMP INCORPORATED. ALL RIGHTS RESERVED.