THIS DRAWING IS UNPUBLISHED. RELEASED FOR PUBLICATION -
© COPYRIGHT- - ALL RIGHTS RESERVED.

LOC	DIST
A1	-

REVISIONS

P	LTR	DESCRIPTION	DATE	DWN	APVD
	G2	REVISED PER ECO-11-005150	31MAR2011	RK	HMR

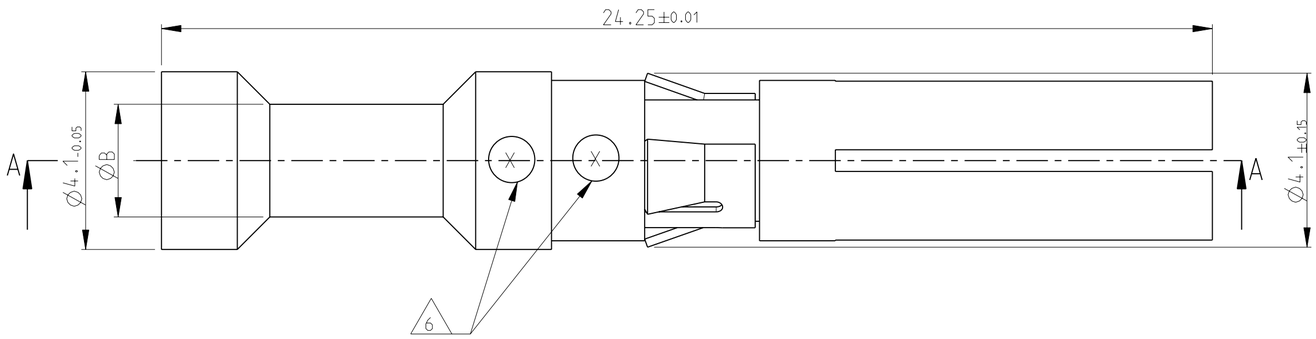

NOTES

1. MATERIAL SEE TABLE
2. SURFACE SEE TABLE
3. ASSEMBLY WEIGHT SEE TABLE
4. PACKAGING: 50 PIECES IN POLYBAG
5. PACKAGING: 500 PIECES IN POLYBAG & CARTON
6. CROSS-SECTION MARKING
7. NO VENTILATION HOLE REQUIRED AT CROSS SECTION >4.0mm²
8. SUITABLE PIN CONTACT: PN 1105300
9. SUITABLE INSERTS: SERIES HVT
10. SUITABLE CRIMP TOOL: PN 1-1105851-8
11. SUITABLE INSERTION TOOL: PN 0-1102855-6
12. SUITABLE EXTRACTION TOOL: PN 0-1102855-3
13. STANDARDS: DIN EN 61984, DIN EN 60664-1

SECTION A-A

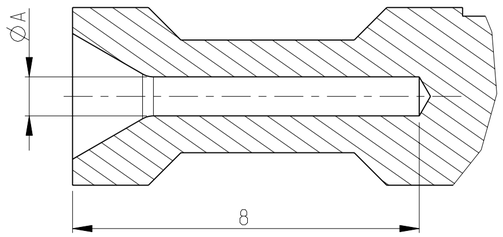

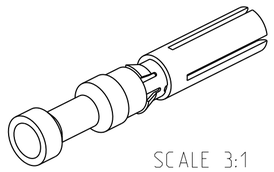

SCALE 3:1

0.00142	0.00144	0.00148	0.00145	0.00149	0.00150	0.00144	0.00148	0.00133	0.00142	0.00144	0.00148	0.00145	0.00149	0.00150	ASSEMBLY WEIGHT IN (Kg) 3						
1															Socket Contact 4.0 mm²	CuZn39Pb3 F50	GOLD PLATING	2.85	3.9	6	1
	1														Socket Contact 2.5 mm²			2.2	3.2	5	
		1													Socket Contact 1.5 mm²			1.8	3.0	4	
			1												Socket Contact 0.75-1.0 mm²			1.45	2.6	3	
				1											Socket Contact 0.5 mm²			1.1	2.6	2	
					1										Socket Contact 0.13-0.4 mm²			0.9	2.6	1	
						1									Socket Contact 14 AWG		SILVER PLATING	2.0	3.2	8	
							1								Socket Contact 12 AWG			2.55	3.6	9	
								1							Socket Contact 10 AWG			3.2	4.1	7	
									1						Socket Contact 4.0 mm²			2.85	3.9	6	
										1					Socket Contact 2.5 mm²			2.2	3.2	5	
											1				Socket Contact 1.5 mm²			1.8	3.0	4	
												1			Socket Contact 0.75-1.0 mm²			1.45	2.6	3	
													1		Socket Contact 0.5 mm²			1.1	2.6	2	
														1	Socket Contact 0.13-0.4 mm²			0.9	2.6	1	
4 5-2	4-2	3-2	2-2	1-2	6-2	8-2	9-1	7-2	5-1	4-1	3-1	2-1	1-1	6-1	DESCRIPTION	MATERIAL 1	SURFACE 2	ØA	ØB	CROSS SECTION MARKING 6	ITEM NO
5 5-9	4-9	3-9	2-9	1-9	6-9	8-8	9-8	7-8	5-8	4-8	3-8	2-8	1-8	6-8							
HVT-C-Bu.Au.4.0 mm²	HVT-C-Bu.Au.2.5 mm²	HVT-C-Bu.Au.1.5 mm²	HVT-C-Bu.Au.0.75-1.0 mm²	HVT-C-Bu.Au.0.5 mm²	HVT-C-Bu.Au.0.13-0.4 mm²	HVT-C-Bu.Ag.AWG.14	HVT-C-Bu.Ag.AWG.12	HVT-C-Bu.Ag.AWG.10	HVT-C-Bu.Ag.4.0 mm²	HVT-C-Bu.Ag.2.5 mm²	HVT-C-Bu.Ag.1.5 mm²	HVT-C-Bu.Ag.0.75-1.0 mm²	HVT-C-Bu.Ag.0.5 mm²	HVT-C-Bu.Ag.0.13-0.4 mm²	ORDERING TEXT						

THIS DRAWING IS A CONTROLLED DOCUMENT.

DIMENSIONS: mm

TOLERANCES UNLESS OTHERWISE SPECIFIED: ISO 8015 DIN ISO 2768 mH-E DIN 16901-120
0 PLC ±
1 PLC ±
2 PLC ±
3 PLC ±
4 PLC ±
ANGLES ±

MATERIAL 1

FINISH 2

DWN	G.WROBLEWSKI	04.SEP.2007
CHK	T.SCHNURPFEIL	04.SEP.2007
APVD	T.SCHNURPFEIL	04.SEP.2007

PRODUCT SPEC -

APPLICATION SPEC -

WEIGHT -

CUSTOMER DRAWING

TE Connectivity

NAME SOCKET CONTACT SERIES HVT -

SIZE	CAGE CODE	DRAWING NO	RESTRICTED TO
A2	00779	C-1105301	-

SCALE 10:1 SHEET 1 OF 1 REV G2