Apr.1.2017 Copyright 2017 HIROSE ELECTRIC CO., LTD. All Rights Reserved.

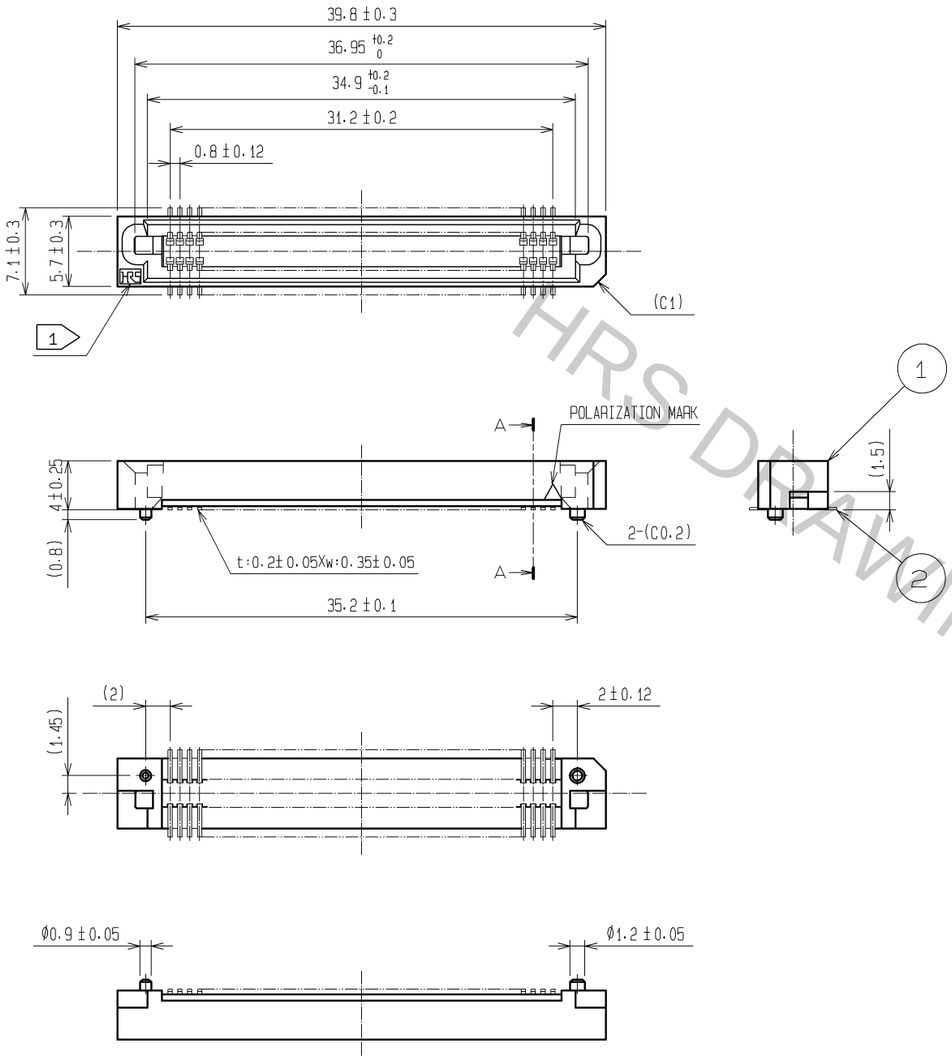

A-A(10:1)

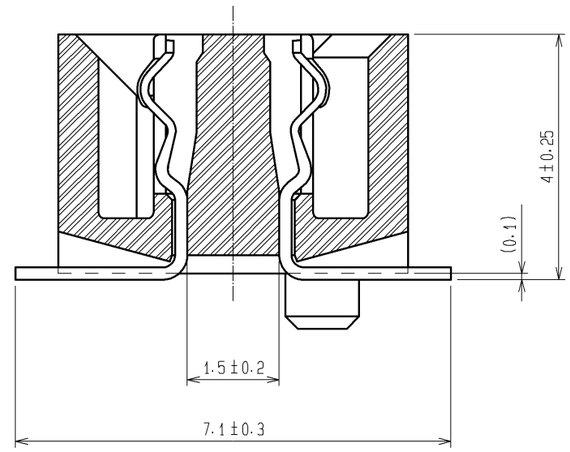

RECOMMENDED LAND PATTERN DIMENSION OF PCB (MOUNTING SIDE)

(METAL MASK THICKNESS:t=0.15)

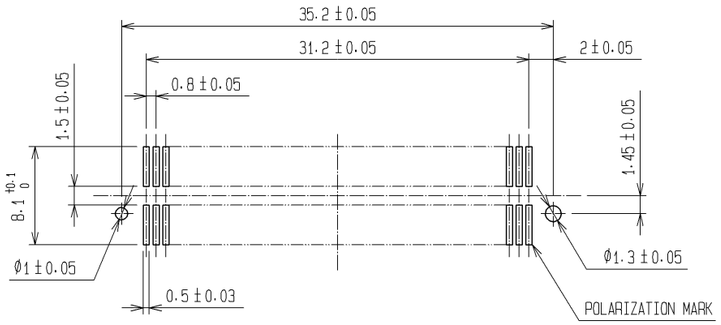

NOTE
1. HRS MARK SHALL BE OPTIONAL.
2. LEAD CO-PLANARITY SHALL BE 0.1mm MAX.
3. FOR MODIFICATION, ETC., PREVENTIVE HOLE FOR SINK MARK MAY BE ADDED ACCORDING TO CIRCUMSTANCES.
4. THE DIMENSIONS IN PARENTHESES ARE FOR REFERENCE.

NO.	MATERIAL	FINISH , REMARKS	NO.	MATERIAL	FINISH , REMARKS
1	PPS	LIGHT BROWN (UL94V-0)	2	PHOSPHOR BRONZE	CONTACT AREA : GOLD 0.1μm min. LEAD AREA : TIN-PLATING 1μm min. UNDER PLATING : NICKEL 2μm min.

UNITS	SCALE	COUNT	DESCRIPTION OF REVISIONS	DESIGNED	CHECKED	DATE
mm	2 : 1					

HRS HIROSE ELECTRIC CO., LTD.

APPROVED	HS. OKAWA	08.06.30	DRAWING NO.	EDC3-084983-25
CHECED	HT. YAMAGUCHI	08.06.28	PART NO.	FX6-80S-0.8SV(71)
DESIGNED	TS. MIYAKI	08.06.26	CODE NO.	CL576-0107-4-71
DRAWN	TS. MIYAKI	08.06.26		1/1

HRS DRAWING FOR REFERENCE

FORM HC0011-5-7