DRAWING MADE IN THIRD ANGLE PROJECTION

680493 ⇔ 680493

/home/us016926/DMTECmod

| PART NUMBER | REV | FIRST USED |
|---|---|---|
| 680493-1 | B | 122500-1 |
| 680493-2 | B | 565435-5 |
| 680493-3 | B | 354500-1 |

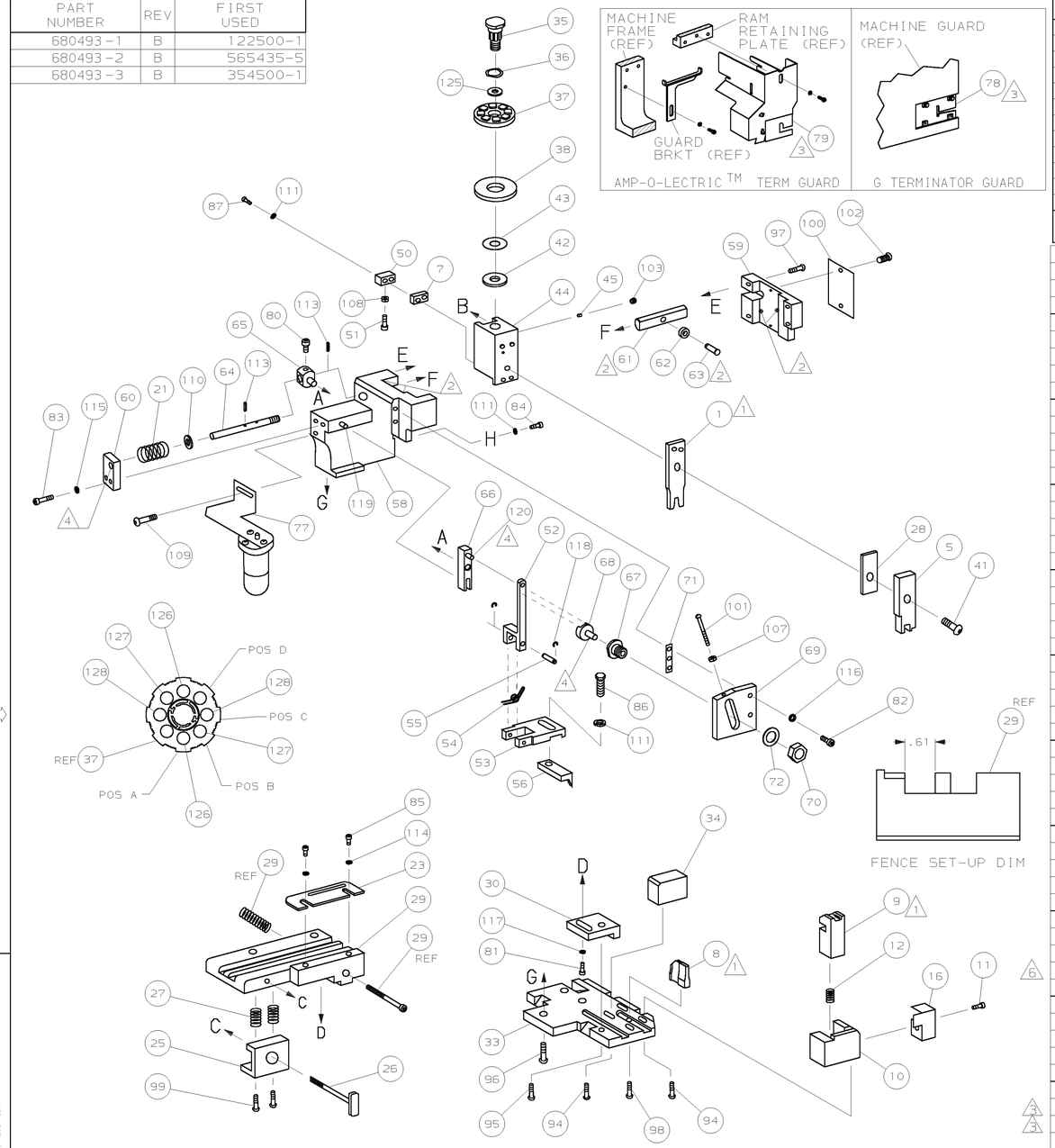


TERMINAL NAME: SOCKET

| AMP P/N | MFG P/N |
|---|---|
| 286606 | ST-JL05-165-C3-3500 |

286606

CRIMPING DATA

| PAD LTR | CRIMP HEIGHT | WIRE SIZE |
|---|---|---|
| A | .043 ±.002 [1.10 ±0.05mm] | 20 |
| B | .039 ±.002 [1.00 ±0.05mm] | 22 |
| C | .037 ±.002 [0.95 ±0.05mm] | 24 |
| D | NOT | USED |

| CRIMP | SIZE | TYPE | RANGE |
|---|---|---|---|
| WIRE | .062 [1.57mm] | F | 24-20 |
| INSUL | - | - | - |

| WIRE STRIP LENGTH | TERM APPL SPEC | FEED | APPL INSTRUCTION | SET UP GAGE | LAYOUT |
|---|---|---|---|---|---|
| .156-.197 | NONE | .472 | 408-8040 | 458637-1 | L1952 |

| -3 | -2 | -1 | U/M | DWG SIZE | PART NO | DESCRIPTION | ITEM NO |
|---|---|---|---|---|---|---|---|
| | | | | | | | 129 |
| 2 | 2 | 2 | - | C | 5-354779-6 | PIN, WIRE DISC (.3270)C | 128 |
| 2 | 2 | 2 | - | C | 5-354779-2 | PIN, WIRE DISC (.3250)B | 127 |
| 2 | 2 | 2 | - | C | 4-354779-3 | PIN, WIRE DISC (.3205)A | 126 |
| 1 | 1 | 1 | - | A | 986950-1 | WASHER, FLAT PRECISION | 125 |
| 1 | 1 | 1 | - | A | 217238-1 | GENERAL INSTRUCTION PACKAGE | 124 |
| 1 | 1 | 1 | - | - | 4088040 | SF APPL INST 408-8040 | 123 |
| | | | | | | | 122 |
| | | | | | | | 121 |
| REF | REF | REF | - | A | 1-21030-1 | PIN,DOWEL(ø.187×.50)LEVER | 120 |
| REF | REF | REF | - | A | 1-21030-6 | PIN,DOWEL(ø.187×1.25)HOUSING | 119 |
| REF | REF | REF | - | A | 21045-3 | RING,RET "C"(ø.187)FD FING PIN | 118 |
| 1 | 1 | 1 | - | A | 21024-5 | WASHER, LOCK(#10)ADJ BLOCK | 117 |
| REF | REF | REF | - | A | 21024-5 | WASHER,LOCK(#10)ADJ PLATE | 116 |
| REF | REF | REF | - | A | 21024-5 | WASHER,LOCK(#10)FEED GDE ROD | 115 |
| 2 | 2 | 2 | - | A | 21024-2 | WASHER,LOCK(#4)FRONT STP GUIDE | 114 |
| REF | REF | REF | - | A | 5-21028-1 | PIN,SLT SPR(ø.125×.50)ADJ ROD | 113 |
| | | | | | | | 112 |
| 4 | 4 | 4 | - | A | 21024-4 | WASHER,LOCK(#8)STRIPPER | 111 |
| REF | REF | REF | - | A | 21899-4 | WASHER,FLAT(ø5/16)SCREW ADJ | 110 |
| - | 1 | - | - | A | 2-21002-6 | SCR,BHC(10-32×.38)LUBE ASSY | 109 |
| 1 | 1 | 1 | - | A | 21018-5 | NUT,HEX(NO.6)HOLDDOWN | 108 |
| REF | REF | REF | - | A | 21018-5 | NUT,HEX(6-32)FEED ADJ | 107 |
| | | | | | | | 106 |
| | | | | | | | 105 |
| 1 | 1 | - | - | A | 992031-1 | PIN, CLEVIS | 104 |
| 1 | 1 | 1 | - | A | 21009-2 | SCR,SKT SET(1/4-20×.25 LW)RAM | 103 |
| 2 | 2 | 2 | - | A | 21017-2 | SCR,DRIVE(#2×.19)ID PLATE | 102 |
| REF | REF | REF | - | A | 6-23715-5 | SCR,PAN HD(6-32×1.50)FEED ADJ | 101 |
| 1 | 1 | 1 | - | B | 461264-1 | PLATE, IDENTIFICATION | 100 |
| 2 | 2 | 2 | - | A | 3-21002-0 | SCR,BHC(10-32×.88)DRAG | 99 |
| 1 | 1 | 1 | - | A | 22733-8 | SCR,BHC(8-32×.38 LW)ANVIL | 98 |
| REF | REF | REF | - | A | 2-21002-9 | SCR,BHC(10-32×.75)CAP | 97 |
| REF | REF | REF | - | A | 2-22733-8 | SCR,BHC(1/4-20×.62)HOUSING | 96 |
| REF | REF | REF | - | A | 2-21002-7 | SCR,BHC(10-32×.50)SG ADJ BLOCK | 95 |
| 4 | 4 | 4 | - | A | 2-21002-2 | SCR,BHC(8-32×.50)TERM H DWN | 94 |
| | | | | | | | 93 |
| | | | | | | | 92 |
| 1 | 1 | 1 | - | A | 1-21002-7 | SCR,BHC(6-32×.38)CAM | 91 |
| | | | | | | | 90 |
| 1 | 1 | - | - | A | 7-21000-9 | SCR,SHC(4-40×.19)STRIPPER | 89 |
| | | | | | | | 88 |
| 2 | 2 | 2 | - | A | 2-21000-9 | SCR,SHC(8-32×.68)DEP-HOLD | 87 |
| 1 | 1 | 1 | - | A | 2-22603-0 | SCR,HEX HD(8-32×.31)FEED FINGER | 86 |
| 2 | 2 | 2 | - | A | 1-21000-3 | SCR,SHC(4-40×.25)F ST GUIDE | 85 |
| 1 | 1 | 1 | - | A | 2-21000-7 | SCR,SHC(8-32×.50)STRIPPER | 84 |
| REF | REF | REF | - | A | 3-21000-7 | SCR,SHC(10-32×.75)FEED ROD GD | 83 |
| REF | REF | REF | - | A | 3-21000-6 | SCR,SHC(10-32×.62)FD ADJ BLK | 82 |
| 1 | 1 | 1 | - | A | 3-21000-4 | SCR,SHC(10-32×.38)SG ADJ BL | 81 |
| REF | REF | REF | - | A | 3-21000-4 | SCR,SHC(10-32×.38)PIVOT BLK | 80 |
| - | REF | - | - | B | 455749-1 | GUARD, WINDOW | 79 |
| REF | - | - | - | B | 679532-1 | INSERT, GUARD | 78 |
| - | 1 | - | - | C | 1-465184-0 | LUBRICATOR ASSY | 77 |
| | | | | | | | 76 |
| | | | | | | | 75 |
| | | | | | | | 74 |
| | | | | | | | 73 |
| REF | REF | REF | - | A | 458109-1 | WASHER, SPECIAL | 72 |
| REF | REF | REF | - | A | 690517-1 | SPACER | 71 |

QTY REQD PER ASSY — PARTS LIST

| -1 | -2 | -3 | U/M | DWG SIZE | PART NO | DESCRIPTION | ITEM NO |
|---|---|---|---|---|---|---|---|
| LEADMAKER | BENCH MODEL K | BENCH MODEL G | | | MECH POST FEED | | |
| | | | | | MECH PRE FEED | | |
| | | | | | MECH PRE FEED | | |
| REF | REF | REF | - | B | 22594-8 | NUT,HEX(1/2-20) | 70 |
| REF | REF | REF | - | B | 240628-1 | PLATE, ADJUSTMENT | 69 |
| REF | REF | REF | - | B | 240626-1 | SHAFT, PIVOT | 68 |
| REF | REF | REF | - | B | 240633-1 | BUSHING | 67 |
| REF | REF | REF | - | A | 455680-1 | LEVER, INTERMEDIATE | 66 |
| REF | REF | REF | - | B | 240629-1 | BLOCK, PIVOT | 65 |
| REF | REF | REF | - | A | 240632-2 | SCREW, ADJ FEED ROD | 64 |
| REF | REF | REF | - | B | 240659-3 | PIN, CAM ROLLER | 63 |
| REF | REF | REF | - | B | 240658-1 | ROLLER, CAM | 62 |
| REF | REF | REF | - | B | 454398-2 | ROD, FEED | 61 |
| REF | REF | REF | - | A | 454178-1 | GUIDE, FEED ROD | 60 |
| REF | REF | REF | - | C | 454220-1 | CAP, RAM | 59 |
| REF | REF | REF | - | D | 454485-1 | HOUSING | 58 |
| | | | | | | | 57 |
| 1 | 1 | 1 | - | B | 3-694433-0 | PAWL, FEED | 56 |
| REF | REF | REF | - | B | 240624-1 | PIN, FEED FINGER | 55 |
| REF | REF | REF | - | B | 691499-1 | SPRING, FEED FINGER | 54 |
| REF | REF | REF | - | B | 690541-1 | HOLDER, FEED FINGER | 53 |
| REF | REF | REF | - | A | 455679-1 | LEVER, TERMINAL FEED ARM | 52 |
| 1 | 1 | 1 | - | A | 811242-2 | BUMPER, HOLDDOWN | 51 |
| 1 | 1 | 1 | - | A | 690753-1 | SPACER, TONKER | 50 |
| 1 | - | - | - | B | 690602-6 | CAM, PRE-FEED 1 5/8 ST | 49 |
| - | 1 | - | - | B | 690602-5 | CAM, PRE-FEED 1 1/8 ST | 48 |
| - | - | 1 | - | B | 690501-4 | CAM, POST-FEED 1 5/8 ST | 47 |
| 1 | 1 | 1 | - | B | 459456-1 | APPLICATOR, BASIC (SUBASSY) | 46 |
| 1 | 1 | 1 | - | A | 690191-1 | PLUG, NYLON | 45 |
| 1 | 1 | 1 | - | C | 455673-1 | RAM | 44 |
| 1 | 1 | 1 | - | A | 690125-1 | WASHER, LAMINATED | 43 |
| 1 | 1 | 1 | - | A | 690124-1 | WASHER, RAM | 42 |
| 1 | 1 | 1 | - | A | 7-21002-9 | BOLT, CRIMPER(5/16×1.00) | 41 |
| | | | | | | | 40 |
| | | | | | | | 39 |
| 1 | 1 | 1 | - | A | 690223-2 | SPACER, INSULATION DISC | 38 |
| 1 | 1 | 1 | - | D | 354777-1 | WIRE DISC, PLASTIC | 37 |
| 1 | 1 | 1 | - | A | 22480-5 | WASHER, SPRING | 36 |
| 1 | 1 | 1 | - | B | 690212-1 | POST, RAM | 35 |
| 1 | 1 | 1 | - | B | 690786-6 | SUPPORT, TERMINAL | 34 |
| REF | REF | REF | - | D | 455675-1 | PLATE, BASE | 33 |
| | | | | | | | 32 |
| | | | | | | | 31 |
| REF | REF | REF | - | B | 455689-1 | BLOCK, STRIP GUIDE ADJ | 30 |
| 1 | 1 | 1 | - | C | 318042-1 | STRIP GUIDE PLATE ASSY | 29 |
| 1 | 1 | 1 | - | C | 2-455888-4 | SPACER, FRONT SHEAR DEP | 28 |
| 2 | 2 | 2 | - | A | 1-22284-0 | SPRING, DRAG | 27 |
| 1 | 1 | 1 | - | B | 690546-1 | LEVER, DRAG RELEASE | 26 |
| 1 | 1 | 1 | - | B | 240792-1 | DRAG, TERMINAL | 25 |
| | | | | | | | 24 |
| 1 | 1 | 1 | - | A | 1-679651-1 | GUIDE, STRIP (FRONT) | 23 |
| - | - | 1 | - | B | 690472-2 | STRIPPER | 22 |
| REF | REF | REF | - | A | 4-22284-9 | SPRING, FEED RETURN | 21 |
| 1 | 1 | - | - | A | 679218-1 | STRIPPER WIRE STOP ASSY | 20 |
| 1 | 1 | - | - | B | 458949-1 | STRIPPER | 19 |
| | | | | | | | 18 |
| | | | | | | | 17 |
| 1 | 1 | 1 | - | B | 318563-1 | GUARD, CHIP, FRONT | 16 |
| | | | | | | | 15 |
| | | | | | | | 14 |
| | | | | | | | 13 |
| 1 | 1 | 1 | - | A | 5-22280-0 | SPRING, SHEAR | 12 |
| 1 | 1 | 1 | - | B | 690461-1 | STOP, SHEAR | 11 |
| 1 | 1 | 1 | - | C | 690459-1 | HOLDER, SHEAR (FRONT) | 10 |
| 1 | 1 | 1 | - | C | 454276-1 | SHEAR, FLOAT (FRONT) | 9 |
| 1 | 1 | 1 | - | C | 1-904132-4 | ANVIL | 8 |
| 1 | 1 | 1 | - | C | 2-240641-9 | SPACER, DEPRESSOR (REAR) | 7 |
| | | | | | | | 6 |
| 1 | 1 | 1 | - | C | 1-455889-4 | DEPRESSOR, SHEAR (FRONT) | 5 |
| | | | | | | | 4 |
| | | | | | | | 3 |
| | | | | | | | 2 |
| 1 | 1 | 1 | - | C | 3-456403-8 | CRIMPER, WIRE | 1 |

QTY REQD PER ASSY — PARTS LIST

REVISION OF EACH ASSY NO (WHEN BLANK, USE DWG REVISION)

1. RECOMMENDED SPARE PARTS.
2. GREASE LIGHTLY.
3. GUARD MUST BE IN PLACE WHEN OPERATING APPLICATOR IN A BENCH MACHINE.
4. LUBRICATE DAILY USING NO. 20 MACHINE OIL.
5. ITEMS WITH QTY OF REF SPECIFIED (EXCEPT ITEMS 78 AND 79) ARE USED ON ITEM 46.
6. CUT TO LENGTH AT ASSY.

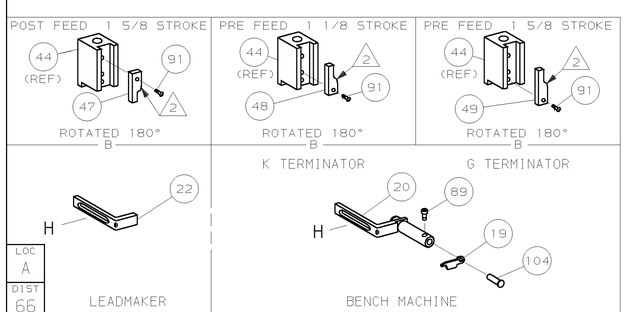


| P | F | LTR | REVISION RECORD | APP | DATE |
|---|---|---|---|---|---|
| | | B1 | ECN 0150-0459-04 | TE | 4-04 |
| | | B | 0150-0825-00 | AA | 11/00 |
| | | A | REVISED | CE | 9/97 |

DIMENSIONS IN INCHES. DO NOT SCALE PRINT.
TOLERANCES UNLESS OTHERWISE SPECIFIED:
2 PLC DEC ±.02
3 PLC DEC ±-
4 PLC DEC ±-
ANGLES ± -
SURF TEXTURE: √
REMOVE BURRS, BREAK SHARP EDGES R.015 MAX

MATL - - HT TR - - FIN - -

DR 10JUL97 B.HIGMAN APP 10JUL97 J.HIRNEISEN
CHK 10JUL97 C.ERISMAN REL - -

AMP Incorporated Harrisburg, PA 17105-3608

NAME SIDE FEED HDM APPLICATOR — MACHINE REF MINI APPL

SCALE - — D — DWG NO 680493 — SHEET 1 OF 1 — REV B1

CAGE CODE 00779 — CUSTOMER AND ASSEMBLY DRAWING — RESTRICTED TO -

THIS DRAWING IS A CONTROLLED DOCUMENT.
RELEASED FOR PUBLICATION: SEP07,1999
BY AMP INCORPORATED. ALL RIGHTS RESERVED.
© COPYRIGHT 1999