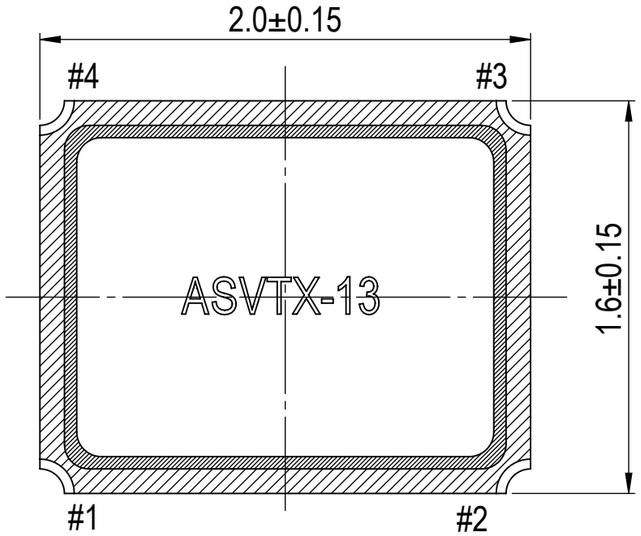

Top View

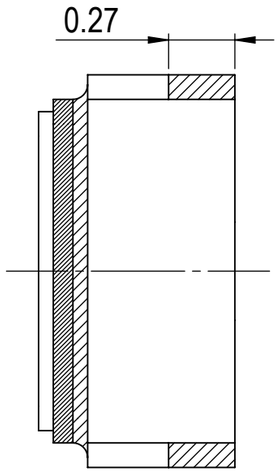

	Pin Connection
# 1 Pin	Vcon
# 2 Pin	GND
# 3 Pin	Output
# 4 Pin	Vcc

ASTX-13 VCTCXO

	Pin Connection
# 1 Pin	GND
# 2 Pin	GND
# 3 Pin	Output
# 4 Pin	+Vcc

ASTX-13 TCXO

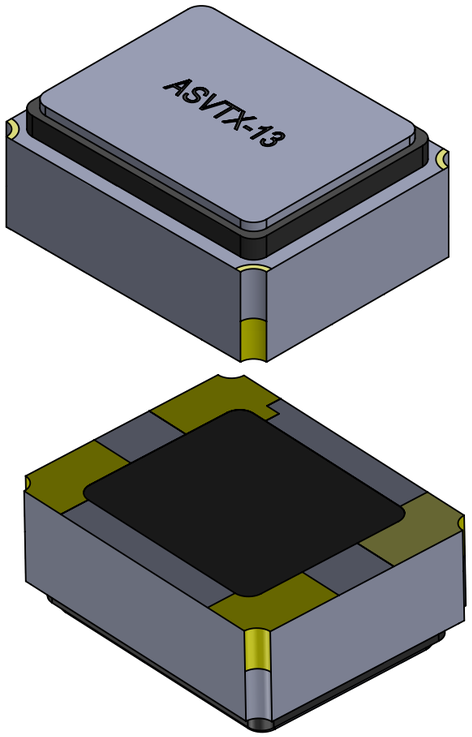

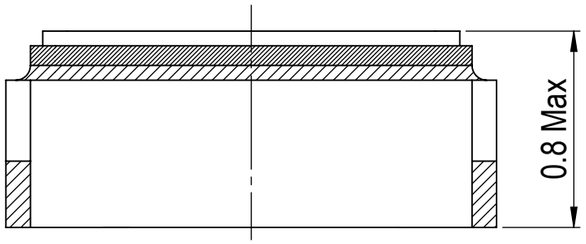

Side View

Recommended Land Pattern

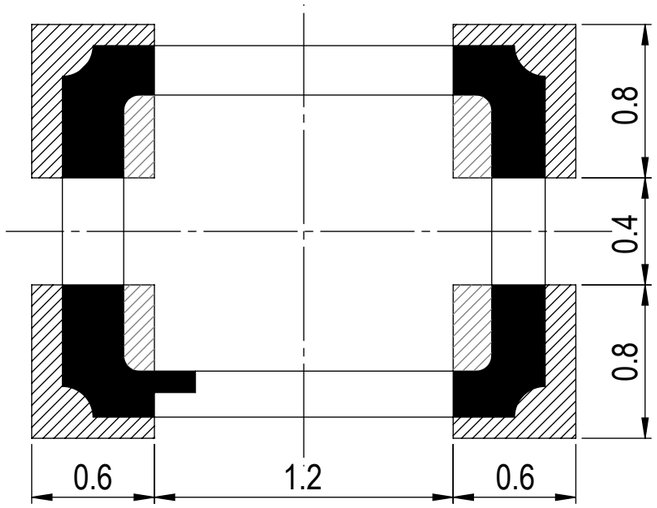

Top View

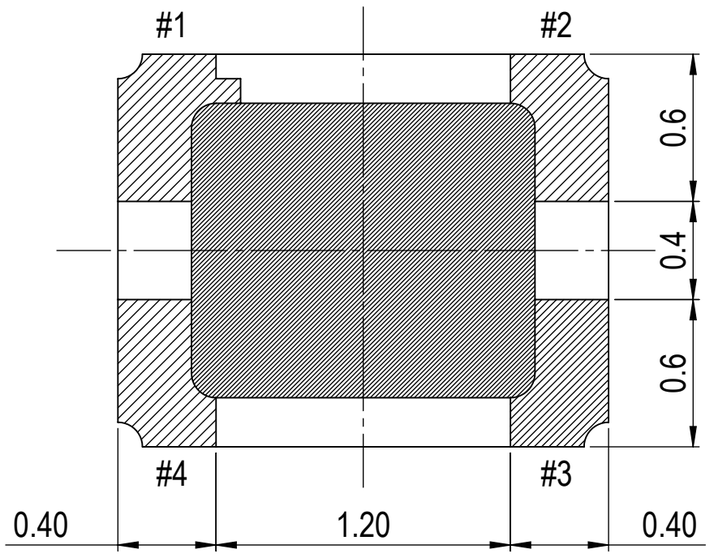

Bottom View

Note1
Co-planarity :80um Max

Note2
Electrode : Mo + Ni 1.5 to 8.89um
+Au 0.3 to 1.0um

Note:It is recommended that a by-pass capacitor of 0.01μF value be placed between pin #2 and pin #4 and an AC-couplig capacitor of the same value be placed in series with pin #3 for optimal performance.For ASTX (TCXO) please connect pin #1 and #2 to GND

UNLESS OTHERWISE SPECIFIED:
DIMENSIONS ARE IN MM
SURFACE FINISH:
TOLERANCES:
LINEAR:
ANGULAR:

FINISH:

DEBUR AND BREAK SHARP EDGES

	NAME	SIGNATURE	DATE
DRAWN	XXXXXX		
CHK'D	XXXXXX		
APPV'D			
MFG			
Q.A			

MATERIAL:

WEIGHT:

DO NOT SCALE DRAWING

REVISION -

ABRACON CORPORATION

30332 Esperanza, Rancho Santa margarita, California 92688

TITLE: ULTRA MINIATURE SMD VC/TCXO

DWG NO. ASVTX-13

A3

SCALE:10:1

SHEET 1 OF 1