THIRD ANGLE PROJ.

NOTES:
1. MATERIALS AND FINISHES:
   BODY - BRASS, NICKEL PLATING.
   CONTACT - BRASS, GOLD PLATING.
   INSULATOR - PTFE, NATURAL
2. ELECTRICAL:
   A. IMPEDANCE: 75 OHM
   B. DIELECTRIC WITHSTANDING VOLTAGE: 1500 VRMS, MIN.
3. MECHANICAL:
   A. DURABILITY: 500 CYCLES MIN.
   B. TEMPERATURE RANGE: -65° C TO +165° C
4. WHEN CRIMPING CONTACT PIN TO CABLE, CRIMP WITH AMPHENOL TOOL 227-944 (M22520/5-01) AND DIE SET 227-980-1, CAVITY 'B'
5. WHEN CRIMPING FERRULE TO CABLE, CRIMP WITH AMPHENOL TOOL 227-944 (M22520/5-01) AND DIE SET 227-980-1, CAVITY 'A'

REVISIONS

REV	DESCRIPTION	DATE	ECO	APPR
B	ROLLING WAS STAKE\RD-DA05091401J	14-Sep-05		JACK
B1	ADDED A SLOT\N/A	17-Jan-06		JUSTIN
C	SEE SHEET 1	28-Sep-06		MARK
G	SEE SHEET 1	07-Apr-10	47967	SH

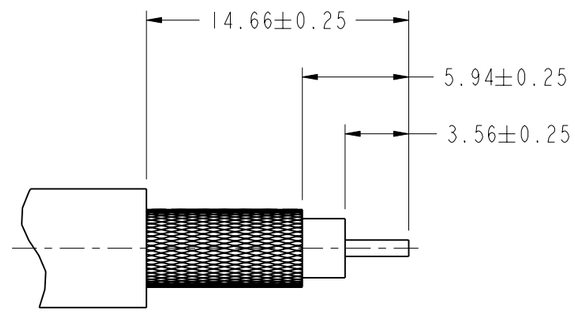

SCALE 3.000

RECOMMENDED CABLE STRIPPING DIMENSIONS

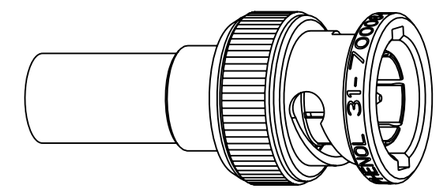

SCALE 2.000

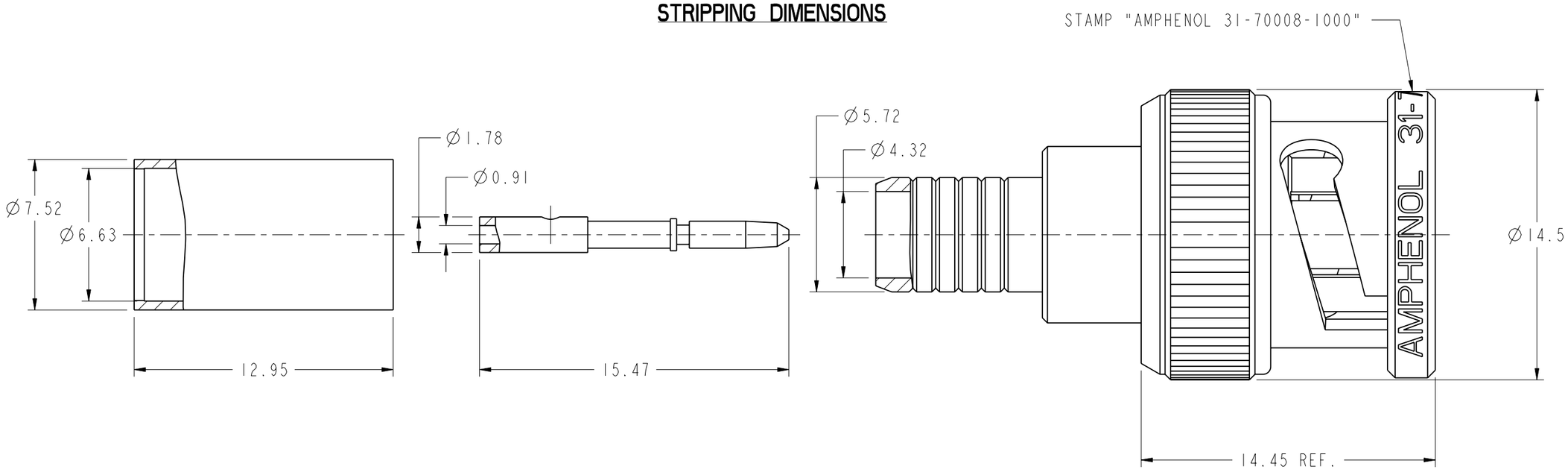

CUSTOMER OUTLINE DRAWING

ALL OTHER SHEETS ARE FOR INTERNAL USE ONLY

UNLESS OTHERWISE SPECIFIED, DIMENSIONS ARE IN METRIC AND TOLERANCES ARE:

<0.5mm	0.5 - 6mm	6 - 30mm	30 - 120mm	ANGLES
± 0.05mm	±0.1mm	±0.2mm	± 0.3mm	±1°

NOTICE - These drawings, specifications, or other data (1) are, and remain the property of Amphenol corp. (2) must be returned upon requiest; and (3) arre confidential and not to be disclosed to any person other than those to whom they are given by Amphenol Corp. the funishing of these drawings, specifications, or other data by Amphenol Corp., or to any other person to anyone for any purpose is not to be regarded by implicatioin or otherwise in any manner licensing, granting rights to permitting such holder or any other sperson to manufacture, use or sell any product, process or design, patented or otherwsie, that may in any way be related to or disclosed by said drawings, specifications, or other data.

MATERIAL
-
-

REFERENCE

FINISH

DRAWN T.DENG	DATE 22-Jan-10	TITLE BNC PLUG (75 OHM) FOR AT&T 734A TYPE CABLE	Amphenol RF Danbury CT USA, Tainan, Taiwan, Shenzhen, China www.amphenolrf.com
ENGINEER D. ROYCE	DATE 12-Aug-88		DRAWING NO. 31-70008-1000
APPROVED S.HSIEH	DATE 07-Apr-10	SCALE: 3.0:1.0 SHEET 2 OF 2	ITEM NO. 31-70008-1000
CAD FILE 1:/BNC/31-70008-1000		DWG SIZE B / REV G	PART NO. 31-70008-1000