Identification	Cable entry	Part number	Drawing (dimensions in mm)
Han-*Yellock*® , Surface mounted housing, incl. bulkhead mounted housings, Side entry 	1x M20 1x M25 1x M32 2x M20 2x M25 2x M32	11 12 300 1210 11 12 300 1211 11 12 300 1212 11 12 300 1214 11 12 300 1215 11 12 300 1216	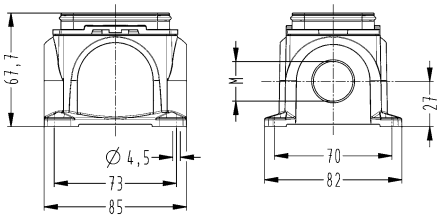
Han-*Yellock*® , Panel feed through housing, Top entry 	1x M32	11 12 300 1702	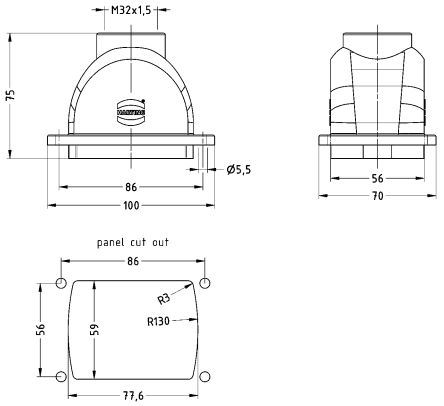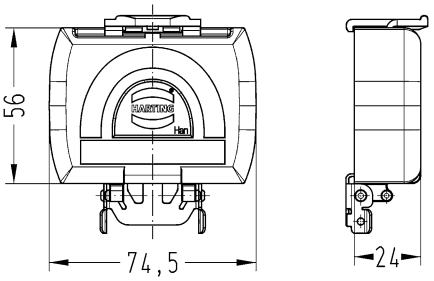
Han-*Yellock*® , Protection cover for bulkhead mounted housings, Thermoplastic 		11 12 300 5401