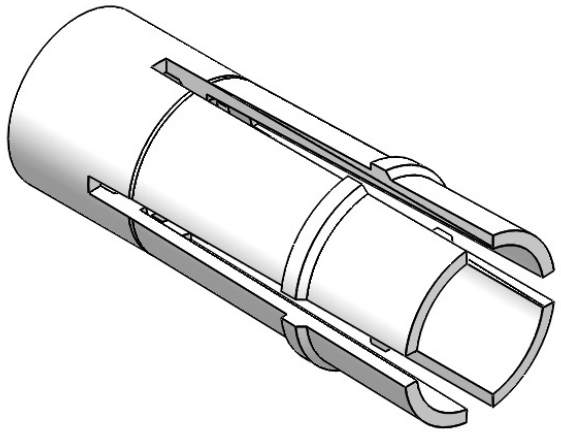

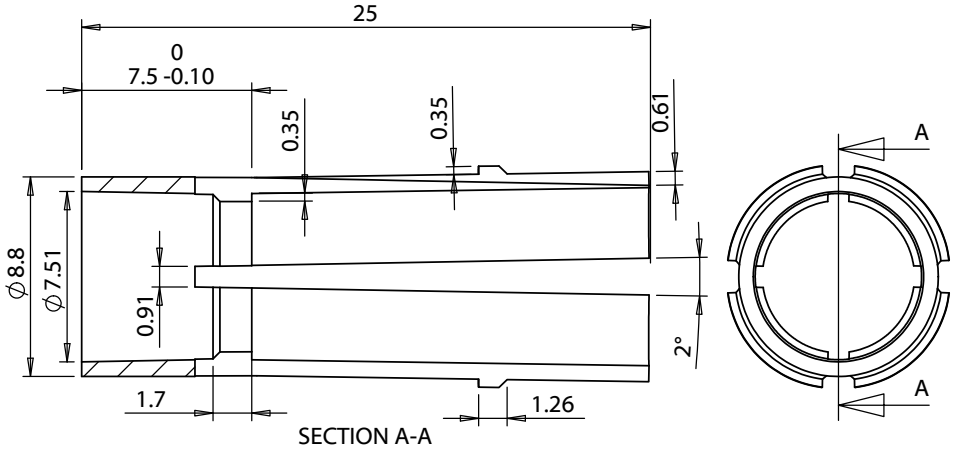

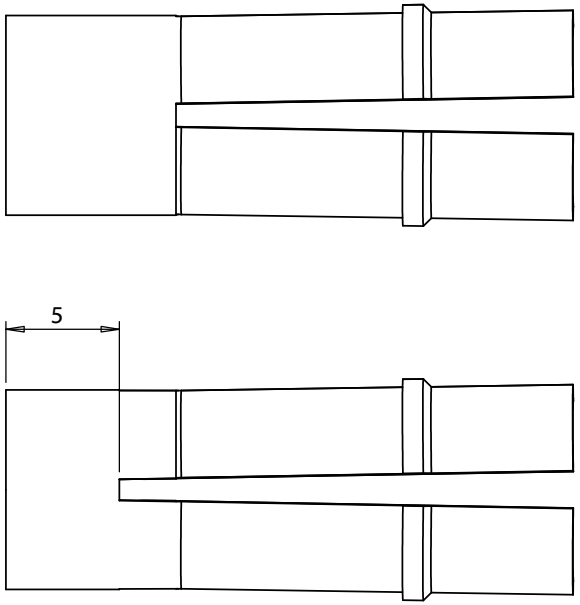

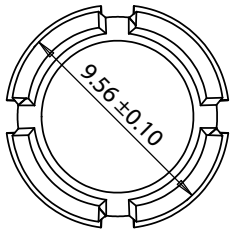

Revision:	Date:	Description:
A1	10/18/2016	Increased diameter to 7.95
A2	10/28/2016	Updated dimensions
A3	11/2/2016	Updated inner diameter
A4	3/8/2017	Updated latch design
A5	7/14/2017	Updated design
A6	7/17/2017	Changed material to Nylon
A7	8/28/2017	Changed rib length to 1.7 mm

Prepared: AG — Digitally signed by AG Date: 2018.02.14 16:33:51 -08'00'

Verified: LA — Digitally signed by LA Date: 2018.02.14 17:16:01 -08'00'

Dimensions are in millimeters.

Notes:

RoHS and REACH compliant

Function test: no open, no short circuit, no intermittent

Description:

Hardware, inner plastic sleeve, 25 mm, Nylon UL94V-0

TENSILITY

tel 1.541.323.3228 *800* 877.670.7118
fax 1.541.323.4202 *web* tensility.com

Size: A

Part number: 56-00002

Scale: 3:1

Sheet 1 of 1

5 4 3 2 1