SHEET OF

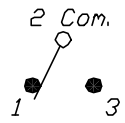

CIRCUIT: SPDT

CONTACT CONFIGURATION

SWITCH FUNCTION		
POS. 1	POS. 2	POS. 3
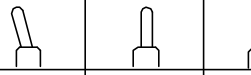		
(ON)	OFF	(ON)
2-3	OPEN	2-1

( )= Momentary

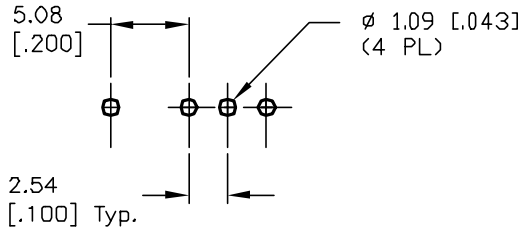

RECOMMENDED P.C.B. LAYOUT

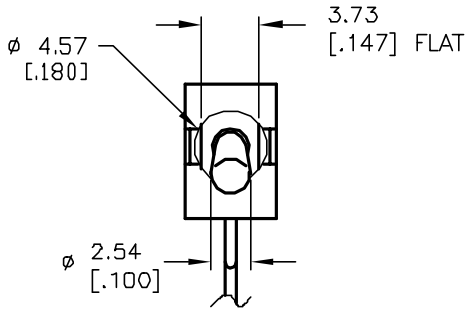

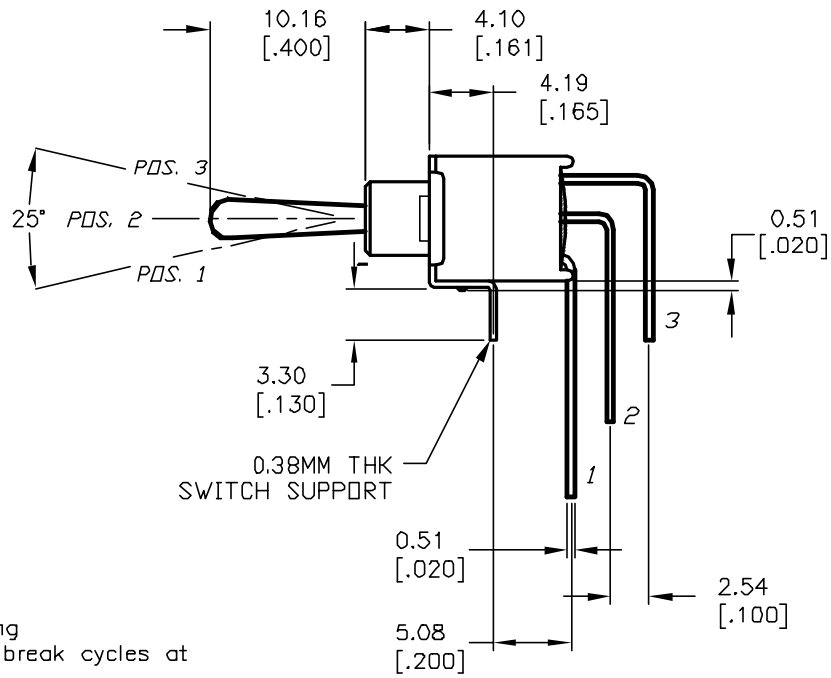

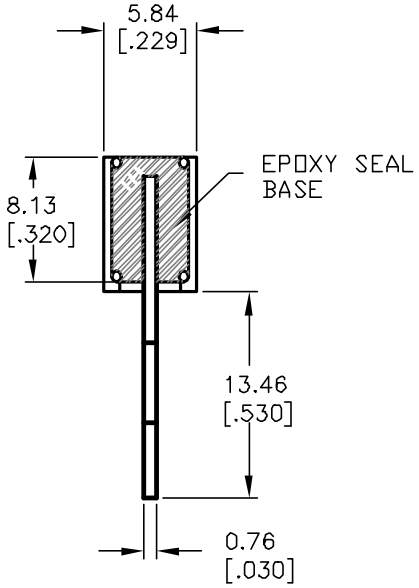

NOTES:

1. ALL DIMENSIONS IN MM [INCH]
2. GENERAL TOLERANCE: X.X=±0.4
   X.XX=±0.25
3. TERM. NOS. FOR REF. ONLY
4. RATING: 3A @120 VAC or 28VDC;
   1A @250VAC
5. FIXED TERM. & MOVING CONTACT:
   Copper alloy w/Silver Plating
6. ELECTRICAL LIFE: 50,000 make-and-break cycles at full load.
7. INSULATION RESISTANCE: 1000M ohm min.
8. DIELECTRIC STRENGTH: 1000V RMS min. @sea level.
9. OPERATING TEMP.: -30°C to 85°C

REV.	ECN No.	DESCRIPTION	DATE	CHKD
A	12567	RELEASED FOR PRODUCTION	11/15/02	CJB

THE INFORMATION CONTAINED IN THIS DOCUMENT IS PROPRIETARY TO E-SWITCH AND IS NOT TO BE COPIED OR TRANSFERRED

E-SWITCH®

TITLE 200A WSP-4 T1 A1 M7 Q E

SCALE	DATE	DR	DWG	REV
2:1	11/15/02	CJB	T201421	A