THIS DRAWING IS UNPUBLISHED. RELEASED FOR PUBLICATION -,- .
© COPYRIGHT - By - ALL RIGHTS RESERVED.

LOC	DIST
FT	G4

REVISIONS

P	LTR	DESCRIPTION	DATE	DWN	APVD
	CB5	REVISED PER ECO-11-004835	11MAR11	RK	HMR

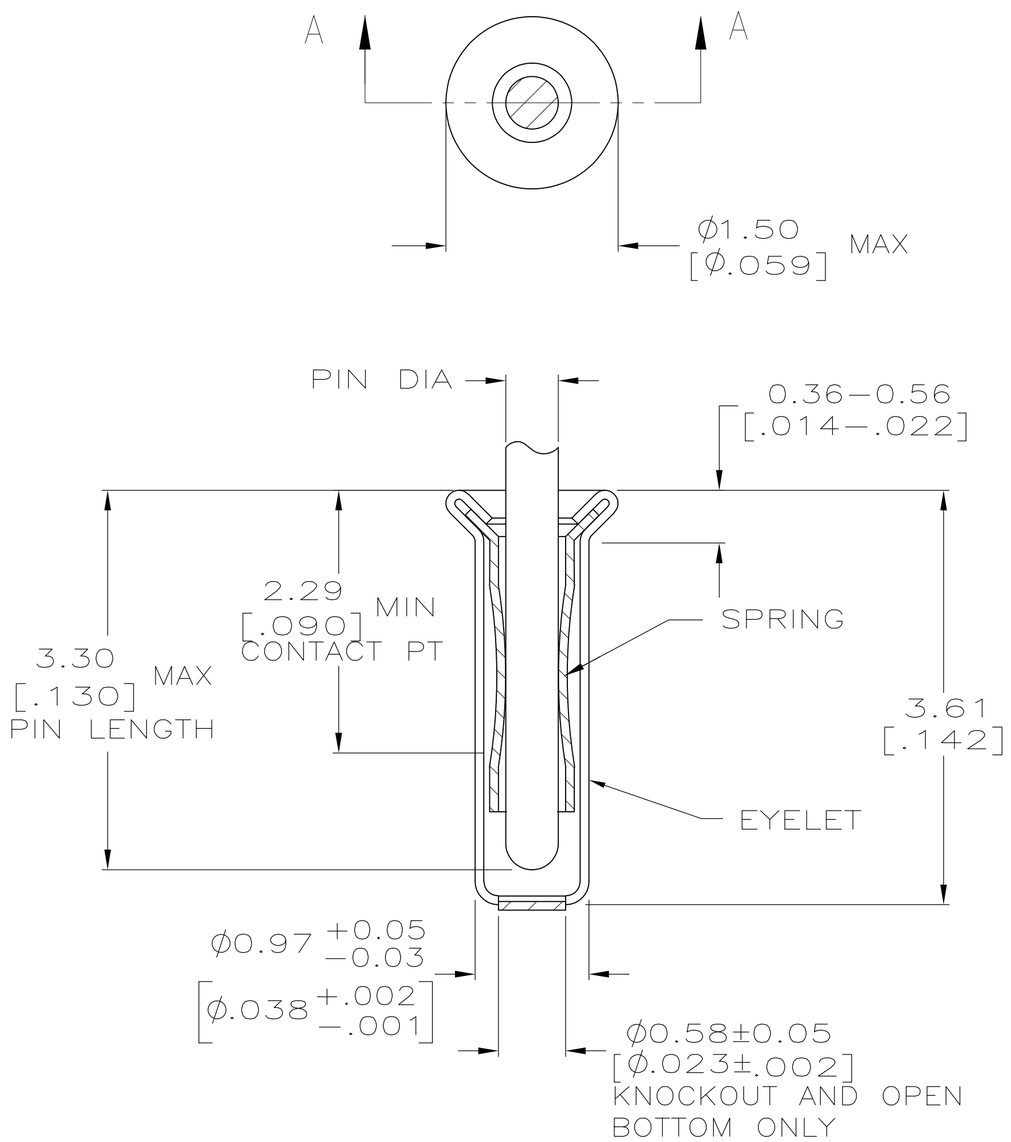

SECTION A–A

△9 OBSOLETE PARTS: OBSOLETE CIS STREAMLINING PER D.RENAUD/D.SINISI

△1 TIN PER MIL–T–10727 OR TIN LEAD .0.00254 [.000100] MIN THK.

△2 GOLD PER MIL–G–45204, TYPE II, 0.00076 [.000030] MIN THK OVER NICKEL PER QQ–N–290 0.00028 [.000011] MIN THK ON CONTACT AREA.

△3 GOLD FLASH PER MIL–G–45204, TYPE II, 0.13μm [.000005] MIN THK. OVER NICKEL PLATE PER QQ–N–290 0.51μm–1.52μm [.000020–.000060] EXT THK.

4. RECOMMENDED HOLE SIZE, PLATED OR UNPLATED:
   MACHINE INSERTION: 1.04±0.05 [.041±.002]
   HAND INSERTION: 1.02 +0.10 –0.00 [.040 +.004 –.000]

5. APPLICATION TOOL PART NUMBER:
   MACHINE NO. 682127–2
   INSERTION HEAD NO. 682039–1

△6 TO INSURE PROPER SPRING TENSION DO NOT EXCEED A 0.10 [.004] DIFFERENCE IN PIN DIA WHEN CHANGING TO A SMALLER PIN.

7. BOTTOM PLUG KNOCKOUT TOOL PART NUMBER 69729 WITH TIP PART NUMBER 69728.

△8 MATERIAL: SPRING: BERYLLIUM COPPER (QQ–C–533)
EYELET: COPPER (QQ–C–576)

	BOTTOM TYPE	RECOMMENDED PIN DIA △6	EYELET FINISH	SPRING FINISH	PART NO
OBSOLETE	CLOSED	0.33–0.51 [.013–.020]	GOLD △3	GOLD △2	9–330808–3
					~~9–330808–2~~
		0.33–0.51 [.013–.020]	TIN △1	TIN △1	~~7–330808–5~~
				GOLD △2	~~7–330808–4~~
		0.46–0.51 [.018–.020]	GOLD △3		~~7–330808–3~~
			TIN △1	TIN △1	~~7–330808–2~~
SUPSD BY 5–330808–3	KNOCKOUT				7–330808–1
SUPSD BY 3–330808–8			GOLD △3	GOLD △2	7–330808–0
△9 OBSOLETE	OPEN		TIN △1		~~6–330808–9~~
OBSOLETE				TIN △1	~~6–330808–8~~
OBSOLETE			GOLD △3		~~6–330808–7~~
	CLOSED	0.33–0.51 [.013–.020]	TIN △1	GOLD △2	6–330808–5
OBSOLETE	OPEN				~~5–330808–6~~
		0.25–0.33 [.010–.013]			5–330808–4
	KNOCKOUT	0.33–0.51 [.013–.020]			5–330808–3
SUPSD BY 5–330808–3		0.25–0.33 [.010–.013]			5–330808–1
SUPSD BY 5–5330808–4	CLOSED				5–330808–0
OBSOLETE	OPEN	0.33–0.51 [.013–.020]	GOLD △3		~~4–330808–8~~
OBSOLETE			TIN △1	TIN △1	~~4–330808–7~~
△9 OBSOLETE		0.25–0.33 [.010–.013]	GOLD △3	GOLD △2	~~4–330808–2~~
OBSOLETE			TIN △1	TIN △1	~~4–330808–1~~
	KNOCKOUT	0.33–0.51 [.013–.020]	GOLD △3	GOLD △2	3–330808–8
OBSOLETE			TIN △1	TIN △1	~~3–330808–7~~
OBSOLETE		0.25–0.33 [.010–.013]			~~3–330808–1~~
	CLOSED	0.33–0.51 [.013–.020]	GOLD △3	GOLD △2	2–330808–8
			TIN △1	TIN △1	2–330808–7
SUPSD BY 5–330808–0		0.25–0.33 [.010–.013]	GOLD △3	GOLD △2	2–330808–2
OBSOLETE			TIN △1	TIN △1	~~2–330808–1~~

330808

THIS DRAWING IS A CONTROLLED DOCUMENT.

DIMENSIONS: mm [INCHES]

TOLERANCES UNLESS OTHERWISE SPECIFIED:
0 PLC ± –
1 PLC ± –
2 PLC ± –
3 PLC ± 0.20 [.008]
4 PLC ± –
ANGLES ± –

MATERIAL △8

FINISH SEE TABLE

DWN R. TALLEY 4–5–91
CHK S. ROBERTSON 8–22–91
APVD R. MILLER 8–22–91
PRODUCT SPEC —
APPLICATION SPEC —
WEIGHT —

CUSTOMER DRAWING

TE Connectivity

NAME MINIATURE SPRING SOCKET ASSEMBLY –

SIZE	CAGE CODE	DRAWING NO	RESTRICTED TO
A2	00779	C–330808	—

SCALE 20:1 SHEET 1 OF 1 REV CB5

1471–9 (3/11)