THIS COPY IS PROVIDED ON A RESTRICTED BASIS AND IS NOT TO BE USED IN ANY WAY DETRIMENTAL TO THE INTERESTS OF PANDUIT CORP.

Material	High Conductivity Seamless Copper Tube
Plating	Electro-Tin
Wire Size	2/0 AWG
Wire Type	Stranded Copper; Class B: Compact, Compressed or Concentric, Class C: Concentric
Wire Strip Length	1-1/16 in.
Stud Size	3/8 in.
UL Listed Wire Connector	Yes, for applications up to 35kv. Consult cable manufacturer for voltage stress relief instructions with applications greater than 2000 volts.
UL Temperature Rating	90° C
C.S.A Certified Wire Connector	Yes
Panduit Color Code on Barrel	BLACK
Panduit Die Index No. on Barrel	P45
Alternate Industry Die Index No. ( ) on Barrel	(13)

CERTIFIED

LISTED
Wire Connector

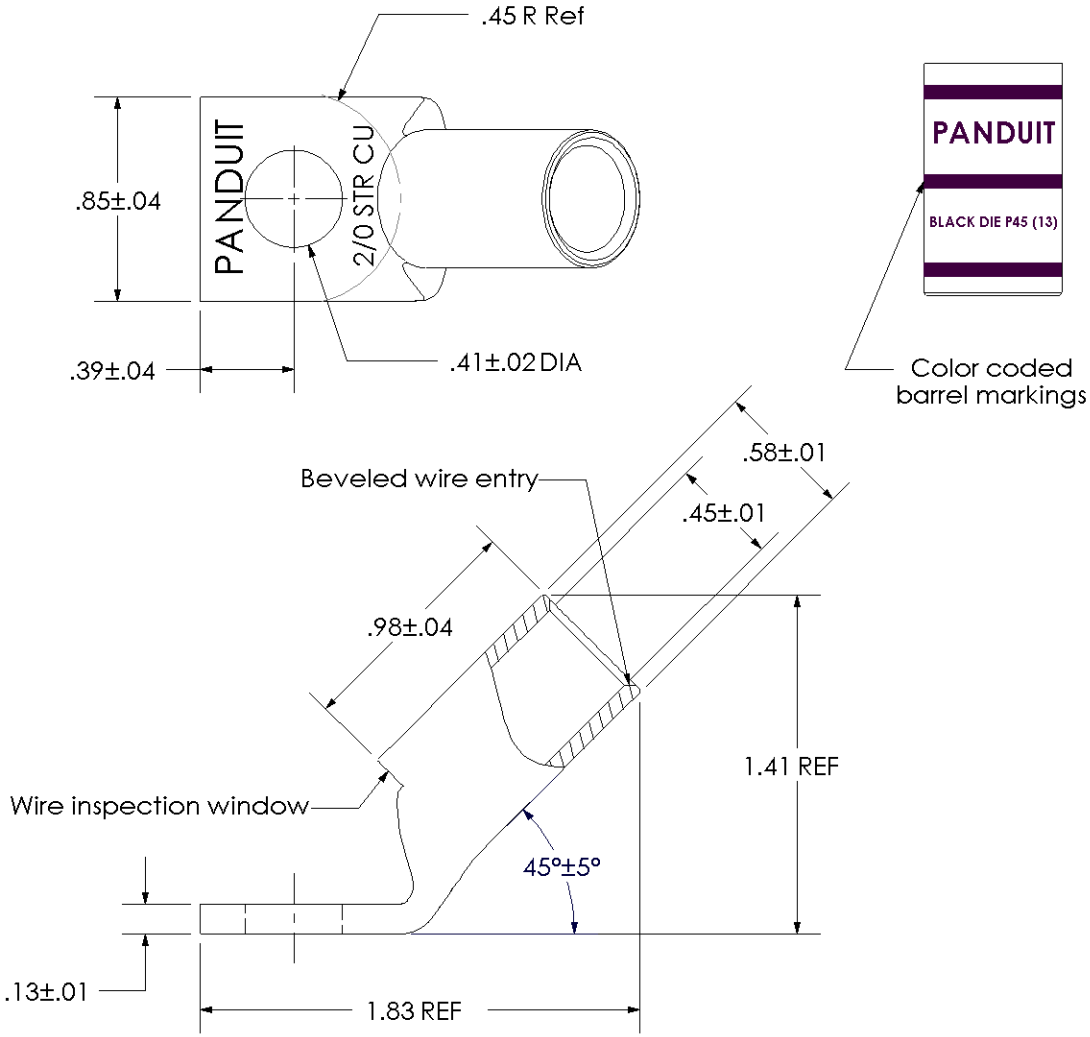

REV	DATE	BY	CHK	DESCRIPTION	ECN
00	8/02	SAB	DRL	RELEASED	10319

PANDUIT CORP. TINLEY PARK, ILLINOIS

LCA2/0-38H-X
Copper Lug - One-Hole, Standard Barrel, 45° Angle Tongue

SCALE N/A

DRAWING NO / CAD FILE LCA2_0-38H-CUST